Gottlieb®

THE PREMIER NAME IN PINBALL

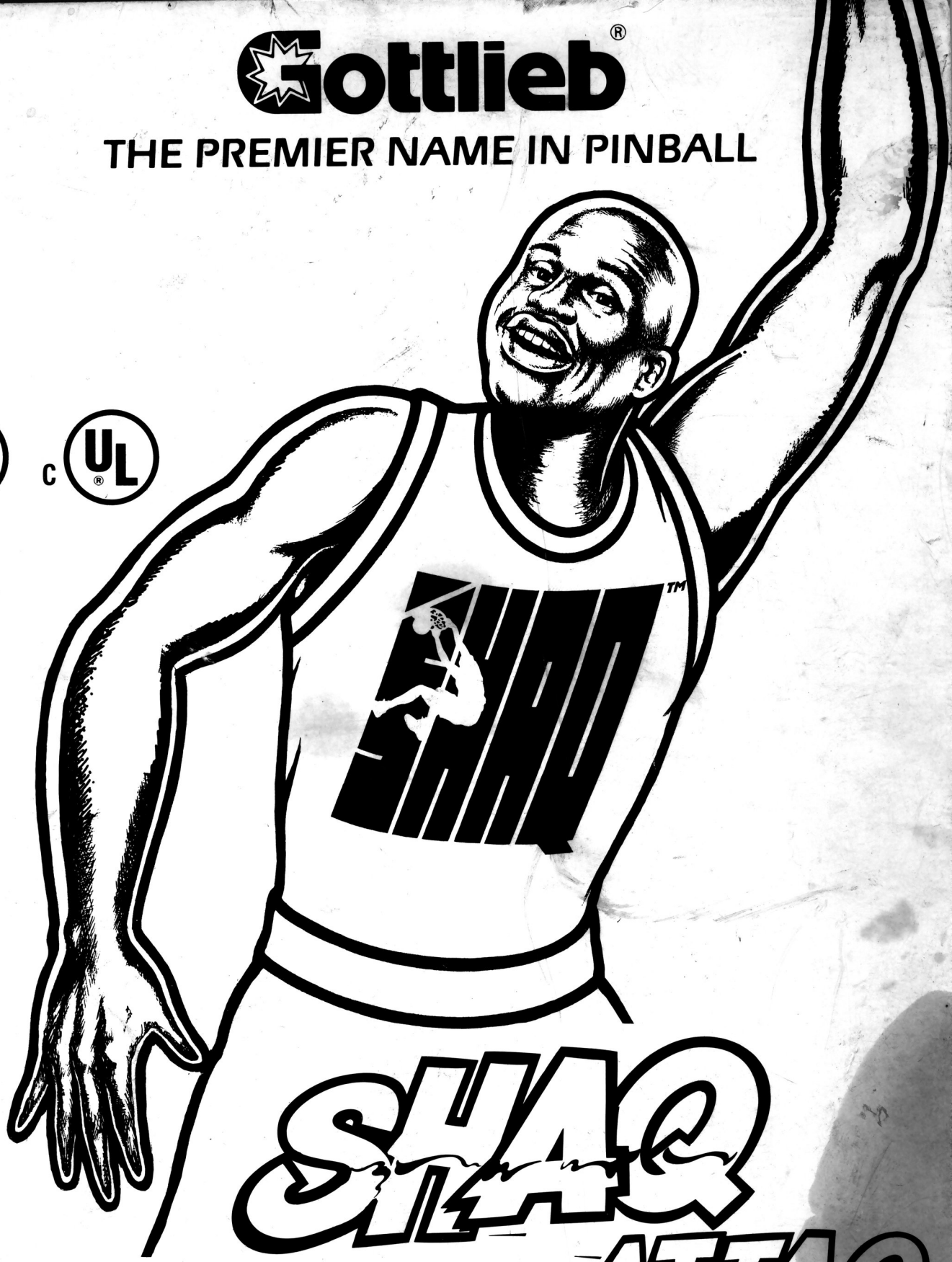

SHAQ ATTAQ™

Premier® Technology

Licensed by Electronic Arts
Shaq and Shaq Logo are trademarks of Mine O' Mine, Inc.
© 1994 Premier Technology. All rights reserved.

Instruction Manual

SHAQ ATTAQ™

GAME #743

(INSTALL 4 BALLS IN OUTHOLE)

INSTRUCTION MANUAL

TABLE OF CONTENTS

SECTION		PAGE(S)
I.	INSTALLATION	ii-1
II.	GAME PLAY AND SCORING	2-5B
III.	TEST MODE	
	I. SELF-TEST	6-7
	II. BOOKKEEPING	7
	III. GAME ADJUSTMENTS	7-15
	IV. UTILITIES	16
	V. TOURNAMENT MODE	16-17
IV.	THEORY OF OPERATION	17-22
V.	GENERAL INFORMATION	24-26
VI.	WIRING AND SCHEMATIC DIAGRAMS	27-62
VII.	PARTS INFORMATION	63-76
	TROUBLESHOOTING GUIDE	INSIDE BACK COVER

GAME PROM:	DISPLAY PROM:	SOUND PROM:	
(TYPE 26C512)	(TYPE 27C040-25)	(TYPE 27C256)	(TYPE 27C040-25)
743/GPROM	743/DSPROM	743/DROM1	743/AROM1
		743/YROM1	(TYPE 27C020-25)
			743/AROM2

NOTE: ANY PROM CHANGES DURING PRODUCTION WILL BE INDICATED BY A REVISION NUMBER FOLLOWING THE GAME NUMBER. CONSULT YOUR DISTRIBUTOR FOR ANY PROM CHANGE UPDATE.

Premier® Technology

759 INDUSTRIAL DRIVE
BENSENVILLE, IL 60106
1-708-350-0400
FAX: 1-708-350-1097

©1994 PREMIER TECHNOLOGY
COPYRIGHT ALL RIGHTS RESERVED

THE PREMIER HOTLINE
1-800-444-0761

SYSTEM 3 OVERVIEW

System 3 contains many new features which improve game play and reliability. Some of these features are as follows:

1) New lithium battery provides data retention for a minimum of 5 years under normal operation and virtually eliminates battery leakage. Also a low battery warning is given in the displays when the voltage drops to the critical level.
2) New interlocking connector system for improved reliability.
3) Use of High Speed CMOS technology for low power consumption and cooler operation.
4) Improved solenoid driver reliability due to simplified circuitry and the use of Rugged Power MOSFETS.
5) Lamp short protection.
6) Switch matrix input protection.
7) Easy line voltage adjustment on location.
8) Improved bookkeeping functions.
9) New 128 x 32 Dot Matrix Display.
10) Capability for operators to enter their own messages in the attract mode.
11) Use of new SMART SWITCH(tm)technology which eliminates the use of contact points on switches. Therefore the need for cleaning dirty switches is eliminated.
12) Addition of a Tournament Mode switch which allows a quick and easy way to replace current adjustment settings with special settings. This switch also provides an easy way to set the game for free play.

This equipment has been found to comply with the limits for a Class A digital device, pursuant to Part 15 of the FCC Rules. These limits are designed to provide reasonable protection against harmful interference when the equipment is operated in a commercial environment. This equipment generates, uses, and can radiate radio frequency energy and, if not installed and used in accordance with the instruction manual, may cause harmful interference to radio communications. Operation of this equipment in a residential area is likely to cause harmful interference in which case the user will be required to correct the interference at his own expense.

WARNING

DO NOT TRANSPORT GAME WITH LIGHTBOX IN THE UPRIGHT (PLAYING) POSITION.
USE LATCH ONLY TO TEMPORARILY HOLD LIGHTBOX UPRIGHT WHILE ATTACHING THE LIGHTBOX TO THE CABINET.
SECURE THE LIGHTBOX TO THE CABINET WITH THE TWO BOLTS AND LOCKWASHERS PROVIDED.

I. INSTALLATION

A. SET-UP

1. Bolt the legs to the cabinet.

2. Lift lightbox into an upright position. Be sure none of the cables are crimped in between the lightbox and cabinet.

3. Engage the snap in the rear of the lightbox to the cabinet.

4. To remove the lightbox backglass and gain servicing access to the electronics panel and the insert lamp assembly, proceed as follows:

   UNLOCK THE LIGHTBOX BY TURNING THE KEY A QUARTER TURN CLOCKWISE.

   LIFT UP THE BACKGLASS RETAINING BOTTOM TRIM ABOUT 3/4" TO CLEAR THE "H" RETAINING CHANNEL ON THE TOP EDGE OF THE DISPLAY/SPEAKER PANEL, PIVOT OUT TOWARDS YOU AND SLIDE THE BACKGLASS DOWN AND OUT, CAREFULLY SET ASIDE.

   REMOVE THE "H" RETAINING CHANNEL, SLIDE THE PLEXIGLASS INSERT UP AND OUT, SLIDE UP AND REMOVE THE DISPLAY/SPEAKER PANEL AND LAY FACE DOWN ON THE CABINET.

   UNLOOSEN THE TWO WING NUTS ON THE LEFT SIDE AND PUSH THE LOCK SLIDE UPWARDS, THIS ALLOWS THE LIGHTBOX LAMP INSERT TO SWING OUT AND FOR GAINING ACCESS TO THE ELECTRONICS PANEL.

5. Secure the lightbox to the cabinet with the bolts and washers provided.

   TO REPLACE THE BACKGLASS, INSERT THE DISPLAY/SPEAKER PANEL, ENSURE THAT THE METAL TABS ON THE PANEL MATE INTO THE WOOD RETAINERS, SLIDE IN THE PLEXIGLASS PANEL AND INSERT THE "H" RETAINING CHANNEL.

   SLIDE THE BACKGLASS UP INTO THE LIGHTBOX, PIVOT INWARDS AND SLIDE DOWN INTO THE "H" CHANNEL, TURN THE KEY A QUARTER TURN COUNTER-CLOCKWISE TO LOCK THE LIGHTBOX.

6. Open the cabinet door and loosen the front moulding locking arm.

7. Remove the front moulding from the cabinet.

8. Slide the playfield glass toward you and remove it, carefully set aside.

9. Slide the playfield toward you, pivot upwards and back towards the lightbox, hold in place and insert the prop stick into the countersunk hole on the underside of the playfield.

   CAUTION!

   Use prop stick when servicing under the playfield.

10. Unravel and straighten out the power line cord located at the rear of the cabinet.

11. Proceed to "B. CHECK-OUT".

B. CHECK-OUT

1. Check that all cables are clear of moving parts.

2. Check for any loose wires.

3. Check switches for loose solder or other foreign matter.

4. Be certain all fuses are firmly seated.

5. Check transformer for any foreign matter across terminals.

6. Be sure that the Transformer Panel power input connector A12J5, corresponds to the supply voltage.

7. Check the setting of the normally open tilt switch on the underside of the playfield. One blade should be free-floating with a weight on the end.

8. The plumb-bob tilt can be adjusted by loosening the clip and raising the plumb-bob to increase its sensitivity, or lowering it to decrease its sensitivity.

9. Lower the playfield into the cabinet. Using the leg adjusters, level the playfield. At this point, the pitch of the playfield should be approximately 6 degrees.

10. Plug the line-cord into a properly grounded 3-wire receptacle ONLY!

11. Refer to Section III to make all necessary game adjustments.

12. Re-install the playfield glass, front moulding and lock the cabinet door.

13. CAUTION! If this game has been subjected to extreme cold, allow to warm up to room temperature.

I. INSTALLATION

C. COIN METER (OPTIONAL)

A +12vdc mechanical coin meter may be installed by the operator to count total coins accepted by the machine. The coin meter leads should be soldered to the lugs on the terminal strip mounted inside the front door on the right side (see Figure 1). If the coin meter is polarized, the positive lead (red) should be attached to the lug that has the cathode (banded) side of the diode attached to it otherwise the leads may be attached in any order. The COIN METER adjustment must be set to on and the following four adjustments should be set to the number of pulses (counts) required for each coin denomination used.

NOTE: Make sure that the GAME MODE adjustment is not set to either REPLAY + TICKETS or TICKETS ONLY (see Game Adjustments section).

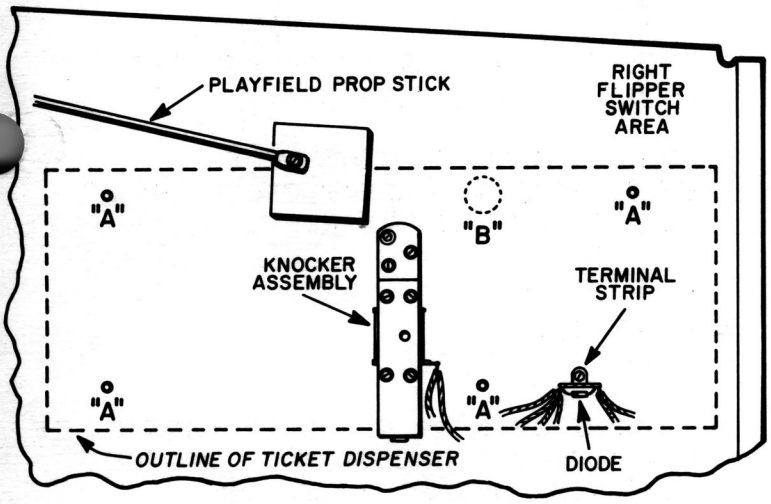

FIGURE 1.

D. TICKET DISPENSER (OPTIONAL)

This machine is equipped to easily interface to the Deltronic Labs TD0M-10-S-S ticket dispenser. To install the dispenser, first locate the five partially drilled holes on the inside of the cabinet on the right side (see Figure 1). The four "A" holes are for mounting the cabinet with #10 X 1-3/4" carriage bolts. The "B" hole is for cable access to the unit. Drill the "A" holes out from the inside of the cabinet using a 13/64" drill bit. Drill the "B" hole out from the inside of the cabinet using a 1" drill bit. In the game envelope you will find template #30213 for a 1/2" plywood spacer to be used between the outside of the game cabinet and the dispenser cabinet so that the dispenser will clear the leg on the game when opened for loading tickets.

The GAME MODE adjustment is used to set whether to dispense a number of tickets along with each replay awarded (REPLAY + TICKETS) or to dispense a number of tickets in place of each replay awarded (TICKETS ONLY). The TICKETS TO AWARD adjustment is used to set the number of tickets to dispense for each replay awarded (see Game Adjustments section).

NOTE: Make sure that the COIN METER adjustment is set to off when using a ticket dispenser.

E. BILL ACCEPTOR (OPTIONAL)

A bill acceptor can be easily interfaced electrically to this machine. The two unused 522 (green-red-red) and 622 (blue-red-red) center chute switch wires should be attached to the switch output of the bill acceptor (see Cabinet/Front Door Schematic Diagram). The line voltage validator outlet located inside the cabinet on the right side can be used for supplying power to the unit. The CHUTE 3 UNITS adjustment can then be used to set the value of the bill being used. The bill acceptor models known to fit the door mechanically are Mars model VFM2 and Tekbilt model NV110. The Tekbilt model also requires an adapter plate.

F. COMMUNICATIONS ADAPTER (OPTIONAL)

A kit (MA-1940) may be purchased through your distributor which will allow the system to output Bookkeeping data to a serial printer.

II. GAME PLAY AND SCORING

*** PLAYFIELD FEATURES ***

UPPER LEFT SPOT TARGET:

* SCORE 500,000.
* SCORE 1 BASKET POINT TIMES MULTIPLIER & COLLECT BASKETBALL EVENT ICON IF LIT OR FLASHING.

LEFT UPKICKER:

* SCORE 500,000.
* RECEIVE TIP-OFF AWARD IF IN NORMAL 1 BALL PLAY.
* SCORE 1 BASKET POINT TIMES MULTIPLIER & COLLECT HORSE HEAD EVENT ICON IF LIT OR FLASHING.

DROP TARGETS:

* SCORE 5,000.
* SCORE 1 BASKET POINT TIMES MULTIPLIER.
* SCORE 1 BASKET POINT TIMES MULTIPLIER & COLLECT MVP CUP EVENT ICON IF LIT OR FLASHING.
* ADVANCE MULTIPLIER IF LIT & BANK COMPLETE.
* IF REBOUND LIT & BANK COMPLETE, LIGHT HIDDEN FEATURE #5 AND AWARD 1 GAME BALL, LIGHT REBOUND IN FEATURES COMPLETED CIRCLE, AND COLLECT THE REBOUND PROGRESSIVE SCORE VALUE. THE SEQUENCE GOES 5, 10, & 20 MILLION.
* IF MVP EVENT ACTIVE, COLLECT PROGRESSIVE AWARD. THE SEQUENCE IS EXTRA BALL, 50, 100, AND 300 MILLION.

SPINNER:

* SCORE 5,000.
* SCORE 1 BASKET POINT TIMES MULTIPLIER & COLLECT BASKETBALL EVENT ICON IF LIT OR FLASHING.
* IF #1 FLASHING, LIGHT #1 SOLID AND START FLASHING #2.
* IF #3 FLASHING, LIGHT #3 SOLID AND START FLASHING #4.
* IF SUPER SPINNER ACTIVE, SCORE AND ADVANCE PROGRESSIVE AWARD. THE SEQUENCE IS 5 MILLION, 10 MILLION, AND 3 BASKET POINTS.
* ADD A LETTER TO HORSE IF HORSE EVENT ACTIVE.

UPPER RIGHT SPOT TARGET:

* SCORE 500,000.
* ADVANCE A LETTER IN "SHAQUILLE" IF SPELL SHAQUILLE LIT.
* SCORE 1 BASKET POINT TIMES MULTIPLIER & COLLECT CLOCK EVENT ICON IF LIT OR FLASHING.

BASKET HOOP:

* SCORE 1,000,000.
* COLLECT JACKPOT OR SUPER JACKPOT IF FLASHING & LIGHT JACKPOT IN THE FEATURES COMPLETED CIRCLE.
* IF BEAT THE BUZZER IS ACTIVE, END THE BEAT THE BUZZER EVENT, AWARD 1 GAME BALL, AND BEGIN FLASHING OUT THE SPECIAL LAMP FOR THE BOTTOM RIGHT SPOT TARGET.
* IF ALLEY-OOP FLASHING OUT, AWARD BASKET POINTS (ADJUSTABLE) AND 1 GAME BALL. ALSO LIGHT ALLEY-OOP IN FEATURES COMPLETED CIRCLE.
* AWARD 2 OR 3 BASKET POINTS TIMES MULTIPLIER IF 2 POINTS OR 3 POINTS LIT SOLID.
* IN 1 BALL PLAY, START MULTIBALL FLASHING OR FLASHING OUT.

II. GAME PLAY AND SCORING

RIGHT UPKICKER:
* SCORE 500.

* IF #5 FLASHING, COLLECT 1 GAME BALL, LIGHT GAME BALL IN THE FEATURES COMPLETED CIRCLE, OFFER PLAYER THE CHANCE TO TRADE ALL OF HIS GAME BALLS FOR AN AWARD, AND RESTART THE 1-5 GAME BALL SEQUENCE.

* START SUPER SPINNER FLASHING OUT IF THE SPINNER BASKETBALL EVENT ICON UNLIT.

HOLE KICKER:
* SCORE 50,000.

* SCORE 1 BASKET POINT TIMES MULTIPLIER & COLLECT MVP CUP EVENT ICON IF LIT OR FLASHING.

* IF FREE THROW IS LIT, SCORE 1-10 BASKET POINTS, AND IF AN EVENT IS ACTIVE (ADJUSTABLE), LIGHT HIDDEN FEATURE #3 & RECEIVE 1 GAME BALL.

RIGHT SIDE ROLLOVER:
* SCORE 90.

* SCORE 1 BASKET POINT TIMES MULTIPLIER & COLLECT MVP CUP EVENT ICON IF LIT OR FLASHING.

* IF #2 FLASHING, LIGHT #2 SOLID AND START FLASHING #3.

* IF #4 FLASHING, LIGHT #4 SOLID AND START FLASHING #5.

* IF DRIBBLE LIT, START DRIBBLE FLASHING OUT.

CENTER SPOT TARGET:
* SCORE 30,000.

* SCORE 1 BASKET POINT TIMES MULTIPLIER & COLLECT CLOCK EVENT ICON IF LIT OR FLASHING.

* START DRIBBLE FLASHING OUT IF LIT.

* IF DRIBBLE FLASHING OUT, SPOT A DROP TARGET (UNLESS IN MVP EVENT) AND SCORE THE PROGRESSIVE DRIBBLE AWARD. THE SCORE SEQUENCE IS 5 MILLION, 10 MILLION, AND 3 BASKET POINTS.

VARI-TARGET (4 STEPS):
* SCORE 300,000, 1, 3, OR 5 MILLION DEPENDING UPON DEPTH OF HIT.

* SCORE 1 BASKET POINT TIMES MULTIPLIER & COLLECT BASKETBALL EVENT ICON IF LIT OR FLASHING.

* ADVANCE BONUS VALUE IF LIT. WHEN BONUS VALUE REACHES 20 MILLION, LIGHT BONUS 20M IN THE FEATURES COMPLETED CIRCLE.

* IF BONUS AT 20 MILLION, SPOT A DROP TARGET IF THE VARI-TARGET IS DRIVEN COMPLETELY BACK.

* IF BREAK THE BACKBOARD FLASHING OUT AND TARGET HIT BACK FAR ENOUGH (ADJUSTABLE), RECEIVE THE PROGRESSIVE BREAK THE BACKBOARD AWARD. THE SEQUENCE IS 10 MILLION, START HURRY-UP EB FLASHOUT, 10 BASKET POINTS, AND 1 GAME BALL.

RAMP TOP OPTO:
* LOCK BALL IF LOCK FLASHING.

* BEGIN ALL FLASHING EVENTS IF BEGIN EVENT FLASHING.

* SCORE 1 BASKET POINT TIMES MULTIPLIER & COLLECT CLOCK EVENT ICON IF LIT OR FLASHING.

* IF LIGHT ALLEY-OOP IS LIT OR SHOOTER LANE ALLEY-OOP IS FLASHING, BEGIN ALLEY-OOP FLASHOUT.

* IF IN MULTIBALL, HOLD BALL FOR 5 SECONDS. SHOOTING THE REMAINING BALL OR BALLS INTO THE RAMP WILL SCORE A JACKPOT OR SUPER JACKPOT AND THEN RELEASE ALL THE BALLS.

* SCORE 100 MILLION WHEN IN SUPERMODE.

LOWER LEFT SPOT TARGET:
* SCORE 30,000.

* AWARD AN EXTRA BALL IF LAMP FLASHING OR FLASHING OUT.

* SCORE 1 BASKET POINT TIMES MULTIPLIER & COLLECT HORSE HEAD EVENT ICON IF LIT OR FLASHING.

BOTTOM RIGHT SPOT TARGET:
* SCORE 30,000.

* AWARD SPECIAL IF FLASHING OUT.

* SCORE 1 BASKET POINT TIMES MULTIPLIER & COLLECT CLOCK EVENT ICON IF LIT OR FLASHING.

II. GAME PLAY AND SCORING

BOTTOM LEFT SPOT TARGET:
* ADVANCE MULTIPLIER WHEN LIT.

* UNLIT, SCORE 3,000.

BALL SHOOTER (PLUNGER SKILL SHOT):
* BALL LEAVING THE SHOOTER WILL FREEZE THE FLASHING SKILL SHOT LAMP.

KICKING RUBBERS:
* SCORE 30.

* WHILE IN 1 BALL PLAY, A HIT ON THE LEFT KICKING RUBBER FOLLOWED IMMEDIATELY BY A HIT ON THE RIGHT KICKING RUBBER WILL START THE DRAIN SHIELD FLASHING OUT.

* TOGGLE LIT EVENT ICON OBJECTIVES IF ALL EVENTS HAVE ALREADY BEEN PLAYED ONCE.

LEFT RETURN ROLLOVER:
* SCORE 30,000.

* SCORE 1 BASKET POINT TIMES MULTIPLIER & COLLECT HORSE HEAD EVENT ICON IF LIT OR FLASHING.

* START SUPER SPINNER FLASHING OUT IF SPINNER BASKETBALL EVENT ICON UNLIT.

RIGHT RETURN ROLLOVER:
* SCORE 30,000.

* SCORE 1 BASKET POINT TIMES MULTIPLIER & COLLECT BASKETBALL EVENT ICON IF LIT OR FLASHING.

* START SUPER SPINNER FLASHING OUT IF SPINNER BASKETBALL EVENT ICON UNLIT.

* START THE VARI-TARGET BREAK THE BACKBOARD LAMP FLASHING OUT.

LEFT OUTLANE:
* SCORE 3,000.

* RETURN BALL IF DRAIN SHIELD IS FLASHING OUT.

* SCORE 6 BASKET POINTS IF IN 1 BALL PLAY AND DRAIN SHIELD UNLIT.

RIGHT OUTLANE:
* SCORE 3,000.

* AWARD SPECIAL IF FLASHING OUT.

* SCORE 6 BASKET POINTS IF IN 1 BALL.

OUTHOLE:
* AT END OF BALL, SCORE ANY OUTHOLE BONUS TIMES MULTIPLIER, HIDDEN FEATURE BONUS IF ANY (ADJUSTABLE), & SLAMMIN' JAMMIN' BONUS (ADJUSTABLE) IF A SLAMMIN' JAMMIN MULTIBALL WAS PLAYED.

* AT END OF GAME, SCORE 100,000 FOR EACH BASKET POINT (ADJUSTABLE) AND 5 MILLION FOR EACH GAME BALL.

FLIPPERS:
* SELECT AWARD CHOICE FROM VARIOUS DISPLAYED OPTIONS.

* CRADLING THE BALL FOR 2 SECONDS WILL CHANGE THE BASKET VALUE LAMP FROM 3 POINTS TO 2 POINTS.

* PRESSING BOTH FLIPPERS WHILE COLLECTING OUTHOLE BONUSES WILL SPEED UP THE COLLECTION PROCESS.

II. GAME PLAY AND SCORING

*** GENERAL GAME FEATURES ***

GAME THEME:

* THE PLAYER TRIES TO SCORE THE MOST POINTS AND BASKET POINTS WHILE PLAYING 4 TIMED QUALIFYING EVENTS ON THE ROAD TO THE FINALS EVENT. EACH EVENT IS QUALIFIED BY COMPLETING ALL OF ITS ASSOCIATED EVENT ICONS. ALL FLASHING EVENTS BEGIN BY SHOOTING THE RAMP WHILE "BEGIN EVENT" IS FLASHING. MULTIPLE EVENTS CAN BE ACTIVE AT THE SAME TIME (MULTIMODE) FROM THE BEGINNING, OR A NEW EVENT CAN BE QUALIFIED WHILE PLAYING AN EVENT AND THEN SHOOTING THE RAMP AGAIN.

HORSE EVENT:

* QUALIFIED BY SHOOTING ALL THE HORSE HEAD EVENT ICONS. THE OBJECTIVE IS TO COMPLETE THE LETTERS OF H-O-R-S-E BY REPEATED SPINNER SHOTS BEFORE TIME EXPIRES. THE FIRST 4 LETTERS OF HORSE SCORE 10 BASKET POINTS EACH AND THE LAST LETTER AWARDS 3 GAME BALLS AND ENDS THE EVENT.

MVP EVENT:

* QUALIFIED BY SHOOTING ALL THE MVP CUP EVENT ICONS. THE OBJECTIVE IS TO SHOOT THE DROP TARGET AS MANY TIMES AS POSSIBLE BEFORE TIME EXPIRES. THE SCORING PROGRESSES FROM AN EXTRA BALL TO 50 MILLION, TO 100 MILLION, AND TO 300 MILLION & END THIS EVENT.

GAME BALLS EVENT:

* QUALIFIED BY SHOOTING ALL THE BASKETBALL EVENT ICONS. THE OBJECTIVE IS TO SHOOT THE VARI-TARGET AS MANY TIMES A POSSIBLE BEFORE TIME EXPIRES. SCORE 2 GAME BALLS FOR ANY HIT AND 3 GAME BALLS IF THE VARI-TARGET IS DRIVEN ALL THE WAY BACK.

SHOT CLOCK EVENT:

* QUALIFIED BY SHOOTING ALL THE CLOCK EVENT ICONS. THE OBJECTIVE IS TO SHOOT THE BASKET HOOP ONCE BEFORE TIME EXPIRES. THE FIRST HOOP SHOT AWARDS 1 GAME BALL, STARTS THE BOTTOM RIGHT SPOT TARGET SPECIAL FLASHING OUT, AND ENDS THE EVENT.

FINALS EVENT:

* QUALIFIED BY PLAYING ALL 4 OF THE PREVIOUSLY DESCRIBED EVENTS. THE OBJECTIVE IS TO MAKE ALL THE STROBING SHOTS BEFORE TIME EXPIRES (ADJUSTABLE). COMPLETING ALL SHOTS SCORES THE POINT VALUE CHOSEN WHEN FINALS WAS ENTERED. WHEN TIME EXPIRES, THE BOARD IS RESET AND THE EVENT QUALIFICATION PROCESS BEGINS AGAIN.

MULTIBALL:

* 3 BALL MULTIBALL QUALIFIED BY MAKING THE RAMP SHOT WHILE MULTIBALL IS FLASHING OR FLASHING OUT. SHOOTING THE BASKET HOOP WHILE IN 1 BALL PLAY (EXCEPT DURING FINALS) STARTS THE MULTIBALL LAMP FLASHING OR FLASHING OUT. THE OBJECTIVE IS TO SCORE JACKPOTS OR SUPER JACKPOTS BY SHOOTING THE HOOP OR RELOCKING ALL BALLS BACK IN THE RAMP.

SHAQ ATTACK:

* 3 BALL MULTIBALL QUALIFIED BY FILLING THE FEATURES COMPLETED CIRCLE AND THEN SHOOTING THE RAMP. WHILE IN SHAQ ATTACK, ALL TARGETS SCORE 1 BASKET POINT TIMES MULTIPLIER. SHAQ ATTACK CONTINUES UNTIL ONLY 1 BALL REMAINS ON THE PLAYFIELD.

MULTIMODE:

* OCCURS AS A RESULT OF HAVING 2 OR MORE EVENTS ACTIVE AT THE SAME TIME. THE SPINNER AND RIGHT SIDE ROLLOVER NOW SCORE AN ADDITIONAL MILLION POINTS FOR EACH ACTIVE EVENT. MULTIMODE LEVEL 3 OR GREATER LIGHTS THE "LEVEL 3" LAMP IN THE FEATURES COMPLETED CIRCLE.

II. GAME PLAY AND SCORING

SUPERMODE:

* ENABLED WHEN ALL 4 EVENTS, MULTIBALL, AND SHAQ ATTACK ARE ALL ACTIVE AT THE SAME TIME. IN ADDITION TO SCORING MULTIMODE AS PREVIOUSLY DESCRIBED, THE RAMP SCORES 100 MILLION.

SLAMMIN' JAMMIN':

* QUALIFIED BY COMPLETING ALL LETTERS OF "SHAQUILLE" AND THEN CHOOSING TO PLAY THE FEATURE AFTER SHOOTING THE LEFT UPKICKER. SHAQUILLE LETTERS CAN BE ADVANCED BY HITTING THE LIT TOP RIGHT SPOT TARGET OR CHOOSING ADVANCE SHAQUILLE FROM TIP-OFF. SLAMMIN' JAMMIN' IS A 3 BALL MULTIBALL WHERE EVERY TARGET ADDS MILLIONS OF POINTS (ADJUSTABLE) TO A BONUS THAT WILL BE COLLECTED AT END OF BALL. THIS FEATURE REMAINS ACTIVE UNTIL 2 BALLS DRAIN.

SUPER SPINNER:

* CAN ONLY BE ACTIVATED AFTER THE SPINNER BASKETBALL EVENT ICON HAS BEEN COLLECTED. SHOOTING THE SPINNER, RIGHT UPKICKER, AND EITHER RETURN ROLLOVER STARTS SUPER SPINNER FLASHING OUT. SHOOTING THE SPINNER NOW SCORES THE PROGRESSIVE AWARD OF 5 MILLION, 10 MILLION, AND 3 BASKET POINTS.

BREAK THE BACKBOARD:

* THE RIGHT RETURN ROLLOVER STARTS THE VARI-TARGET BACKBOARD LAMP FLASHING OUT (ADJUSTABLE). A HIT (ADJUSTABLE) ON THE VARI-TARGET SCORES A PROGRESSIVE SEQUENCE OF 10 MILLION, START HURRY-UP EB, 10 BASKET POINTS, AND 1 GAME BALL.

ALLEY-OOP:

* ENABLED FROM THE PLUNGER SKILL SHOT OR BY SHOOTING THE RAMP WITH A LIT LIGHT ALLEY-OOP LAMP. THE BASKET HOOP ALLEY-OOP LAMP BEGINS FLASHING OUT. SHOOTING THE HOOP SCORES SEVERAL BASKET POINTS (ADJUSTABLE), 1 GAME BALL, AND LIGHTS ALLEY-OOP IN THE FEATURES COMPLETED CIRCLE.

HIDDEN FEATURES:

* 5 HIDDEN FEATURES ARE SCATTERED AROUND THE PLAYFIELD. DISCOVERING THEM LIGHTS A CORRESPONDING LAMP A SCORES AN "END OF GAME" OR "END OF BALL" BONUS (ADJUSTABLE). THE HIDDEN FEATURES ARE AS FOLLOWS:
  - #1 - PLAYING MULTIMODE LEVEL 5 OR SUPERMODE.
  - #2 - RELOCK ALL BALLS IN RAMP DURING MULTIBALL.
  - #3 - SHOOTING "FREE THROW" DURING AN EVENT (ADJUSTABLE).
  - #4 - TIP-OFF 5,000 POINTS CHOSEN 2 OR 3 TIMES (ADJUSTABLE).
  - #5 - SCORE A DROP TARGET REBOUND.

* THE BONUS IS BASED ON TOTAL FOUND AND IS AS FOLLOWS:
  - 1 FOUND - 10 MILLION
  - 2 FOUND - 30 MILLION
  - 3 FOUND - 100 MILLION
  - 4 FOUND - 300 MILLION
  - 5 FOUND - 1 BILLION

GAME BALL:

* THIS FEATURE REQUIRES ADVANCING THE FLASHING 1, 2, 3, AND 4 LAMPS BY SHOOTING THE SPINNER AND RIGHT LAN ROLLOVER. COMPLETING THOSE 4 LAMPS WILL FLASH #5. SHOOTING THE RIGHT UPKICKER WILL THEN AWARD 1 GAME BALL AND LIGHT GAME BALL IN THE FEATURES COMPLETED CIRCLE. THE PLAYER IS THEN GIVEN THE OPTION OF TRADING ALL GAME BALLS FOR AN AWARD. THE MORE GAME BALLS ACCUMULATED - THE BETTER THE AWARD.

PLUNGER SKILL SHOT:

* PLAYER WILL SOMETIMES BE GIVEN A CHOICE BETWEEN ENABLING ALLEY-OOP OR BEGINNING ALL QUALIFIED EVENTS. THIS IS INDICATED BY ALTERNATING THE FLASHING LAMPS IN THE SHOOTER LANE WHILE THE BALL IS SITTING AT THE PLUNGER. SHOOTING THE BALL WILL STOP THE LAMP MOVEMENT AND GIVE THE APPROPRIATE AWARD ONCE THE BALL REACHES THE RAMP.

TIP-OFF:

* A MYSTERY AWARD ACTIVE DURING NORMAL 1 BALL PLAY AND ENABLED BY SHOOTIN THE LEFT UPKICKER. THE PLAYER IS ALLOWED TO CHOOSE BETWEEN A POINT AWARD OR SOME OTHER AWARD.

NOTES

III. TEST MODE

There are several functions accessible to the operator while in the test mode. These functions are Self-Test, Bookkeeping, Game Adjustments, and Utilities. Each of these functions will be explained in detail later in this section. To enter the test mode, the game must be in the attract mode (game over). Then depress the Test button located just inside the front door of the game. The operator will then be given a choice as to which function he wants to access. Use the left flipper button to choose (highlight) the function desired and then either the Test button or the right flipper button to enter the chosen function.

NOTE: The Test button may be held in to fast forward through the steps of a particular function.

To exit the test mode or change functions the Slam switch (front door) must be activated or the power must be turned off.

I. SELF-TEST

This function will allow the operator to test all the hardware related devices in the game. Each test is described below. In most cases the Credit button can be used to restart each test (see Testmode Flowchart).

A. MEMORY TEST

This function tests all memory devices on the Control Board (A1). If all the devices pass the test an "OK" will be displayed. If a failure occurs, a description of the faulty component will be displayed. Then after a short period of time the Game Prom check sum will be displayed.

B. LAMP CHECK

This function will flash all the controlled lamps and flasher lamps continuously. This will allow the operator to easily check for and replace any burned out light bulbs.

C. LAMP MATRIX TEST

This test will allow an operator to single step through and check the operation of each lamp in the game. The left flipper button will decrement the active lamp number by one while the right flipper button will increment the active lamp number by one. The strobe number and the return number are combined to form the lamp number (strobe,return) which is shown in the display along with a description of the lamp. Only one lamp at a time should flash during this test.

D. RELAY AND SOLENOID TEST

This test will allow an operator to single step through and check the operation of each relay and solenoid driver in the game. The left and right flipper buttons are used to change the active driver number. The selected driver description and number will appear in the display. The Credit button is then used to activate the driver for a short time period. Solenoid #31 ("Q" relay) is always on during this test so as to provide power to devices such as the pop bumpers and kicking rubbers (see Playboard Schematic Diagram).

E. SWITCH MATRIX TEST

The first part of this test will report any switch(s) which have not been operated in the course of the last 15 games (INOPERATIVE SWITCHES). The second part of the test will report any switch(s) which are stuck closed. If no switches are closed when this test is started, the message "ALL SWITCHES OPEN" will be displayed. If any switches are closed, the closed switch(s) name and number will continuously be displayed. The strobe number and the return number are combined to form the switch number (strobe,return). The Credit button can be used to restart this test.

F. SWITCH EDGES TEST

This test will display the name and number of any switch that is actuated. When actuating each switch, a problem exists if either no switch is shown or any switch other than the one actuated is displayed.

G. DISPLAY TEST

This test checks the operation of the 128 x 32 dot matrix display. The right flipper button is used to advance this

test. The first two steps check the different levels of display intensity. Each block that appears on the display should be of lesser intensity than the one to the left of it. During the next four steps a diagonal pattern is stepped from left to right in the display. While in this part of the test every fourth pixel only in each row of dots should be lit. During the next eight steps another diagonal pattern is stepped from left to right in the display. While in this part of the test every eighth pixel only in each row of dots should be lit.

H. SOUND TEST

This test checks the interface lines from the Control Board (A1) to the Sound Board (A6). Every time the right flipper button is pressed, a different tone should be heard. During each tone, the sound line connection which is being tested will be shown in the display. After the tone stops the sound line which is being tested will still be kept at a low level (<.8v) until the right flipper button is pressed again or the Credit button is used to restart the test.

J. FRONT DOOR TEST

This test checks the operation of the coin chutes used in the game. Utilizing this function will not affect any bookkeeping values. Each coin chute closure is categorized and shown in the display.

II. BOOKKEEPING

The Test button is used to step through bookkeeping. The display will contain a description of each step, the step number, and two different bookkeeping values. The value in the leftmost column represents long term bookkeeping. The value in the rightmost column (in brackets) represents short term bookkeeping. These two values are provided so that the operator may compare recent performance with long term performance and then make any necessary game adjustments.

NOTE: The left column of steps 1 (earnings) and 17-20 (coin chute counts) will not be displayed unless the credit button is pressed during that active step number.

The left flipper button will allow the operator to reset all of the left (long term) and right (short term) bookkeeping values. The right flipper button will allow the operator to reset all of the right (short term) bookkeeping values only. If the R.BOOK AUTO-RESET adjustment is on, the right (short term) bookkeeping will automatically be reset after every 2000 plays (see Game Adjustments). Therefore, the operator does not need to reset the short term bookkeeping himself unless he prefers to follow his own procedure. Also, this feature will aid in adjusting the game payout percentage to the caliber of players in different locations. If there happens to be a major error in a long term bookkeeping value the word ERROR will appear to the right of that bookkeeping value. To correct this error the long term bookkeeping must be reset. A description of each bookkeeping step is given in the test mode flowchart.

III. GAME ADJUSTMENTS

This function allows the operator to make any adjustments to his game as necessary.

A. FACTORY SETTINGS

Upon entering the game adjustment section of bookkeeping, the operator is given a choice to load all factory settings or to single step through the game adjustments and adjust each section individually. If he chooses

to enter the factory settings by depressing the Credit button, he will also be given a choice of what language to load. By using the right flipper button he may choose the appropriate language and then depress the Credit button again to enter the settings. After the settings are loaded the display should show the message "FACTORY SETTINGS LOADED" for a short time and then proceed to game adjustment step 1. At any time during the previous steps the operator may either exit the test mode or depress the Test button to proceed immediately to game adjustment step 1.

WARNING
Loading the factory settings will affect all previous game adjustment settings. Therefore be careful when selecting this feature.

B. GAME ADJUSTMENT STEPS

Each time the Test button is pressed a description of the next step appears in the display along with the step number and the current status of that step. Unless otherwise specified, the left and right flipper buttons are used to change the possible selections in each step.

1) SCORE REPLAY LEVEL 1
2) SCORE REPLAY LEVEL 2
3) SCORE REPLAY LEVEL 3
Each Score Replay Level may be set by using the left flipper button to decrement the score and the right flipper button to increment the score. The Credit button can be used to load the factory setting for each individual level if desired. If the Auto-Percentaging adjustment is on, Replay Levels 2 & 3 can only be set to on or off. If Replay Level 2 is on, the score level will be set to two times Replay Level 1. If Replay Level 3 is on, the score level will be set to three times Replay Level 1. This allows the operator several combinations of levels in the Auto-Percentaging mode (i.e. 1, 1 & 2, 1 & 3, or 1 & 2 & 3).

4) HIGH GAME TO DATE 1
5) HIGH GAME TO DATE 2
6) HIGH GAME TO DATE 3
7) HIGH GAME TO DATE 4
8) HIGH GAME TO DATE 5
Each High Game To Date may be set by using the left flipper button to decrement the score and the right flipper button to increment the score. The Credit button can be used to load the factory setting for the displayed level and all those below it.
9) GAME PRICING
This step provides a choice of loading a standard setting for a particular country or a custom setting. When a standard setting is selected, the following steps (10-17) are skipped.

10) CHUTE 1 UNITS (L)
11) CHUTE 2 UNITS (R)
12) CHUTE 3 UNITS (C)
13) CHUTE 4 UNITS
14) UNITS REQUIRED FOR CREDIT
15) UNITS REQUIRED FOR BONUS
16) BONUS CREDITS
17) MINIMUM UNITS REQUIRED FOR CREDIT
Steps 10-17 are used if a custom setting is selected in step 9 (GAME PRICING). Steps 10-13 select the number of units that each chute is worth when a coin is dropped into that particular chute. The value entered for step 14 determines how many units must be accumulated for a credit to be issued on the game. Steps 15 and 16 determine how many units must be accumulated for any bonus credits to be issued. A value of zero entered for step 15 will disable the bonus feature. Step 17 indicates the number of units required before any credits are issued (see Coin Chute Setting Table for examples).

18) COIN METER
If set to ON, the pulses to be given for each of the four coin chutes can be defined so that the number of pulses for a given chute are in relation to the currency denomination. If set to OFF, steps 19-22 will be skipped.

19) CHUTE 1 PULSES
20) CHUTE 2 PULSES
21) CHUTE 3 PULSES
22) CHUTE 4 PULSES
The four steps above are used to set

III. TEST MODE

COIN CHUTE SETTING TABLE

Country	Coin Chutes Left 1	Right 2	Center 3	4	Plays/Coin(s)	Chute Adjustment Steps 10 11 12 13 14 15 16 17
USA	.25	.25	$1		1/.50, 2/$1	01 01 04 00 02 00 00 00
USA (Custom)					1/.50, 5/$2	01 01 04 00 02 08 01 00
					1/.50, 2/.75, 3/$1	03 03 12 00 04 00 00 00
					1/.50, 3/$1	01 01 04 00 02 04 01 00
					1/.25, 4/$1	01 01 04 00 01 00 00 00
Australia 1	.20	$1	$2	-	1/3x.20, 2/$1, 5/$2	02 10 20 00 05 20 01 00
Australia 2	.20	$1	$2	-	1/5x.20, 1/$1, 3/$2	01 05 10 00 05 10 01 00
Australia 3	.20	$1	$2	-	1/5x.20, 1/$1, 2/$2	01 05 10 00 05 00 00 00
Belgium	5Fr	20Fr	50Fr	-	1/20Fr, 2/40Fr, 3/50Fr	01 04 10 00 04 10 01 00
Canada	.25	$1	-	-	1/.50, 2/$1	01 04 00 00 02 00 00 00
Denmark	1Kr	10Kr	-	-	1/3x1Kr, 4/10 Kroner	01 10 00 00 03 10 01 00
Finland	5Mka	1Mka	-	-	1/3x1 Markka, 2/5 Markkaa	10 02 00 00 05 00 00 00
France 1	1Fr	5Fr	10Fr	20Fr	1/3x1Fr, 2/5Fr, 5/10Fr	02 10 20 40 05 20 01 00
France 2	1Fr	5Fr	10Fr	20Fr	2/5Fr, 4/10Fr, 9/20Fr	02 10 20 40 05 40 01 10
France 3	1Fr	5Fr	10Fr	20Fr	1/5Fr, 3/10Fr, 7/20Fr	03 15 30 60 10 60 01 15
Germany 1	5DM	2DM	1DM	-	1/1DM, 2/2DM, 6/5 D-Mark	05 02 01 00 01 05 01 00
Germany 2	5DM	2DM	1DM	-	1/2DM,2/3DM,3/4DM,5/5DM	20 08 04 00 05 20 01 00
Germany 3	5DM	2DM	1DM	-	1/2DM, 3/5DM	05 02 01 00 02 05 01 00
Greece	50D	50D	-	-	1/100 Drachma	01 01 00 00 02 00 00 00
Hungary	20F	20F	-	-	1/20 Forint	01 01 00 00 01 00 00 00
Italy	500L	500L	-	-	1/2x500L,2/3x500L,3/4x500L	03 03 00 00 04 00 00 00
Japan	100Y	100Y	-	-	1/100 Yen, 3/2x100 Yen	01 01 00 00 01 02 01 00
New Zealand	$1	$2	-	-	1/$1, 3/$2	01 02 00 00 01 02 01 00
Norway	5Kr	10Kr	-	-	1/5Kr, 2/10 Kroner	01 02 00 00 01 00 00 00
Singapore 1	-	.50	Token	-	1/.50 or 1/Token	00 01 01 00 01 00 00 00
Singapore 2	.20	-	-	-	1/2x.20	01 00 00 00 02 00 00 00
Spain	500P	100P	-	-	1/100P, 6/500 Pesetas	05 01 00 00 01 05 01 00
Sweden	10Kr	5Kr	-	1Kr	1/5x1Kr, 1/5Kr, 2/10Kr	10 05 00 01 05 00 00 00
Switzerland	1Fr	5Fr	2Fr	-	1/1Fr, 3/2Fr, 7/5 Francs	01 07 03 00 01 00 00 00
United Kingdom 1	1£	50P	20P	10P	1/3x10P, 2/50P, 4/1 Pound	
United Kingdom 2	1£	50P	20P	10P	1/50P, 3/1 Pound	
Universal	-	-	-	-	1/1 Coin	01 01 00 00 01 00 00 00

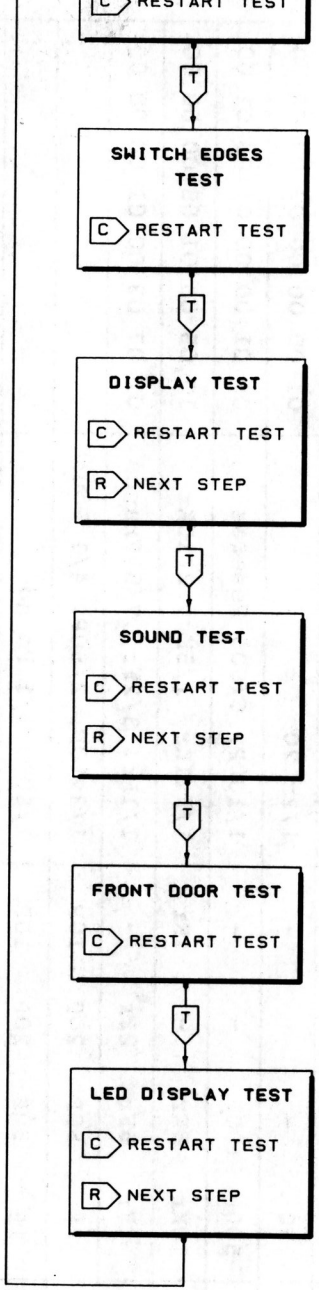

34) 400M+ SCORES
35) FIRST REPLAY LEVEL
36) HIGHEST GAME TO DATE
37) 1-15 SEC. BALL TIME
38) 16-30 SEC. BALL TIME
39) 31-45 SEC. BALL TIME
40) 46-60 SEC. BALL TIME
41) 61 SEC.+ BALL TIME
42) % L OUTLANE DRAINS
43) % R OUTLANE DRAINS
44) HORSE EVENTS
45) MVP EVENTS
46) GAME BALLS EVENTS
47) SHOT CLOCK EVENTS
48) SHAQ ATTAQ EVENTS
49) SLAMMIN JAMMIN MODE
50) FINALS EVENTS
51) LEVEL 3 REACHED
52) LEVEL 5 REACHED
53) SUPER MODE REACHED
54) GAME BALLS WON
55) GAME BALLS TRADED
56) MULTIBALL EVENTS
57) JACKPOTS WON
58) SUPER JACKPOTS WON
59) MIN TIME EXTRA BALLS
60) SUPER SPINNER POINTS
61) MULTI-MODE POINTS (M)
62) 0-24 BASKET POINTS
63) 25-49 BASKET POINTS
64) 50-99 BASKET POINTS
65) 100-149 BASKET POINTS
66) 150-199 BASKET POINTS
67) 200+ BASKET POINTS
68) HORSE EVENTS COMPLETE
69) HIDDEN FEATURES FOUND
70) SHOT CLOCK SPEC LIT
71) TOTAL HOOP SHOTS
72) TOTAL BACKBOARD HITS
73) HOOP BASKET POINTS
74) FREE THROW BASKET PTS
75) TIP OFF BASKET POINTS
76) LIT ICON BASKET PTS
77) SHAQ ATTAQ BASKET PTS
78) DROP TARG BASKET PTS
79) MVP EXTRA BALLS
80) GAME BALL EXTRA BALLS
81) LEFT TARG EXTRA BALLS
82) TIP OFF EXTRA BALLS
83) ALLEY-OOP FEATURE WON
84) OUTLANE SPECIALS
85) RIGHT TARGET SPECIALS

L PRESS LEFT FLIPPER BUTTON

R PRESS RIGHT FLIPPER BUTTON

22) CHUTE 4 PULSES
23) COIN DOOR TYPE
    Steps 24-28 are skipped if COIN DOOR TYPE is not set to CUSTOM.
24) COLLECTION TEXT
25) CHUTE 1 VALUE
26) CHUTE 2 VALUE
27) CHUTE 3 VALUE
28) CHUTE 4 VALUE
29) GAME BUY-IN BONUS
30) EXTENDED PLAY
31) EXTENDED PLAY MAXIMUM
32) EXTENDED PLAY CHUTE(S)
33) GAME PERCENT PAYOUT
34) MATCH PERCENT PAYOUT
35) HIGH GAME REPLAYS
36) MAXIMUM CREDITS
37) TILT WARNINGS
38) BALLS PER GAME
39) GAME MODE
40) TICKETS TO AWARD
41) LANGUAGE
42) AUTO PERCENTAGING
43) REPLAY LIMIT
44) HIGH GAMES 2-5
45) ATTRACT SOUND
46) ATTRACT MESSAGE 1
    Use the credit button to enter a message.
47) ATTRACT MESSAGE 2
48) RIGHT BOOK AUTO-RESET
49) PLAYFIELD SPECIAL
50) REPLAY LEVEL BOOST
51) GAME RESTART
52) GAME INACTIVITY TIMER
53) GAME DIFFICULTY
54) EVENT TIMING
55) BACKBOARD LAMP TIMING
56) BREAK THE BACKBOARD
57) HURRY-UP EB TIMING
58) HURRY-UP EB START
59) FINALS EVENT TIMER
60) TIP OFF EXTRA BALL %
61) SUPER JACKPOT
62) GAME BALL TRADE VALUE
63) SLAMMIN JAMMIN BONUS
64) LAST BALL SPECIAL
65) HIGH BASKETS SPECIAL
66) HURRY-UP SPECIAL TIME
67) HIDDEN FEATURES
68) HIDDEN FEATURES BONUS
69) SHAQ ATTAQ CIRCLE ADV
70) ALLEY-OOP AWARD
71) SHAQUILLE FEATURE
72) BALL TIME SAFETY
73) REDUCED SCORING
74) HIGH BASKET POINTS
75) MINIMUM GAME TIME
76) REDUCED COACH SPEECH

NOTE:
THE TEST MODE CAN ONLY BE ACCESSED DURING THE ATTRACT MODE (GAME OVER).

THE TEST MODE MAY BE EXITED BY EITHER ACTUATING THE SLAM SWITCH ON THE FRONT DOOR OR TURNING THE POWER OFF.

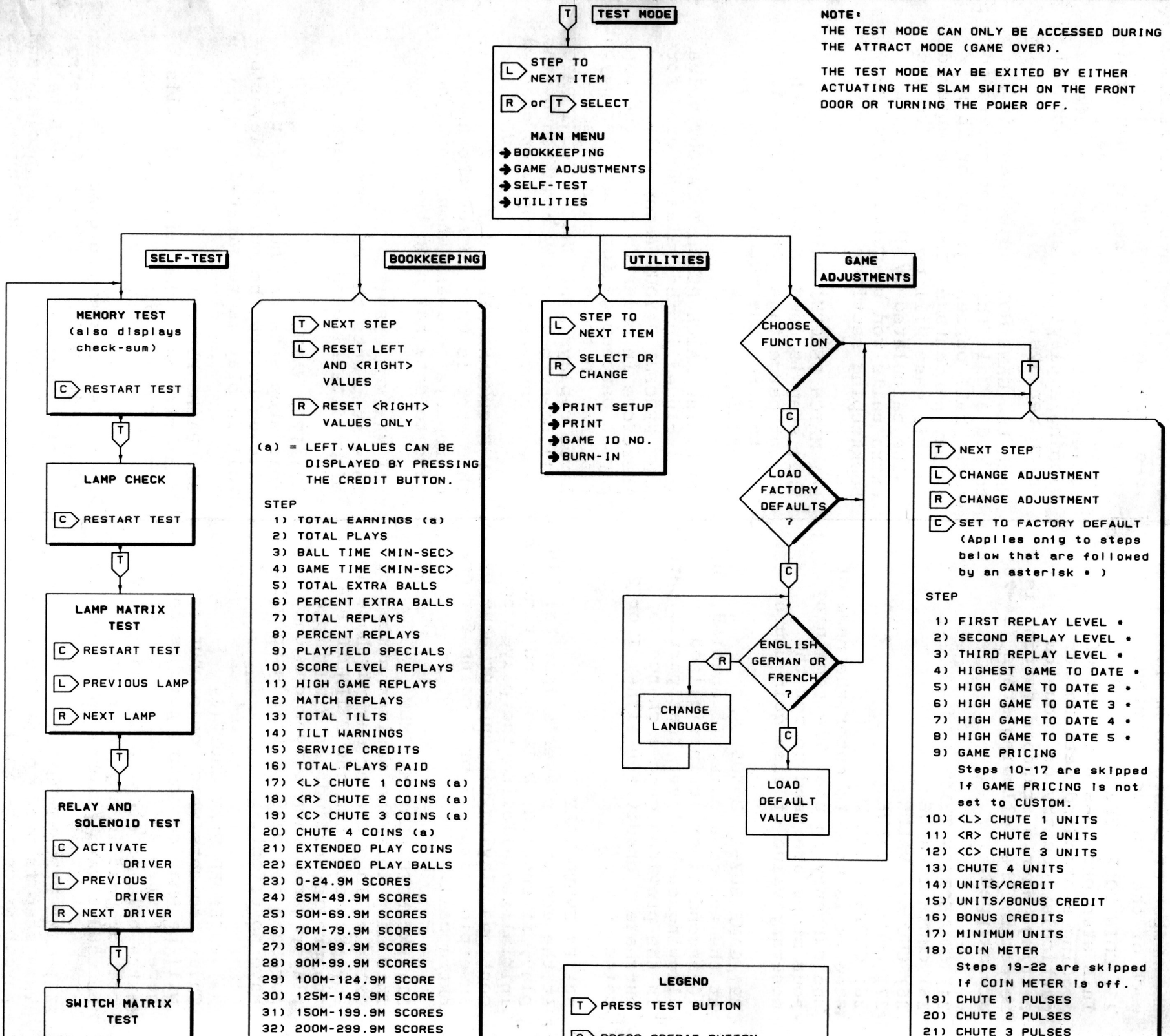

the number of pulses to be issued for each of the four coin chutes.

23) COIN DOOR TYPE
This step provides a choice of loading a standard setting for a particular country or a custom setting. When a standard setting is selected, the following steps (24-28) are skipped.

24) COLLECTION TEXT
25) CHUTE 1 VALUE
26) CHUTE 2 VALUE
27) CHUTE 3 VALUE
28) CHUTE 4 VALUE
Step 24 is used to enter the name of the currency in use. The remaining four steps are used to set the monetary value of each coin chute.

29) GAME BUY-IN BONUS
At the end of a game, if enabled, a 10-second timer is initialized allowing each player that participated in the previous game a chance to purchase 1 credit for either 1 or 2 coins.

30) EXTENDED PLAY
At the end of a player's last ball in play, if enabled, a 10-second timer is initialized allowing the player to continue playing his current game by inserting either 1 or 2 coins for one extra ball.

31) EXTENDED PLAY MAXIMUM
This step sets the maximum number of extra balls a player may purchase in any one game when the EXTENDED PLAY feature is enabled. In a multiple player game, each player can only purchase one ball so this step will have no effect.

32) EXTENDED PLAY CHUTE(S)
This step sets which coin chute(s) will be enabled toward purchasing a game if step 29 is enabled and/or an extra ball if step 30 is enabled. A coin dropped in any other chute will be used toward purchasing a new game.

33) GAME PERCENT PAYOUT
This step is used to set the game payout percentage used when the Auto-Percentaging adjustment is on. The value entered for this step is compared to the value calculated by dividing total replays by total plays (see Bookkeeping section). Total replays include all replays won from beating the score replay level, achieving a new high game to date, winning a playfield special, and all match replays.

When the GAME MODE adjustment is set to Add a Ball this setting refers to extra ball percentage rather than replay percentage. The value entered in this case will be compared to the value calculated by dividing total extra balls won by total plays (see Bookkeeping section).

34) MATCH PERCENT PAYOUT
This step is used to set the match payout percentage. If this step is set to zero, the match will be disabled.

NOTE: The MATCH PERCENT PAYOUT value is included in the value entered for GAME PERCENT PAYOUT (step #33). Therefore in order to retain the same payout percentage for the other payout features in the game such as score level replays, the GAME PERCENT PAYOUT will be automatically adjusted by the same amount as this step when changed.

35) HIGH GAME REPLAYS
This step is used to set the number of replays to award when the highest game to date has been beaten.

36) MAXIMUM CREDITS
This step sets the maximum number of credits allowed on the game.

37) TILT WARNINGS
This step sets the number of tilts allowed before the current player's ball in play is terminated.

38) BALLS PER GAME
This step sets the number of balls per game to 1-5.

39) GAME MODE
This step allows the game to be played in Replay, Replay + Tickets, Tickets Only, Add a Ball, or Novelty mode. In Replay mode all Specials and replays are allowed. Replay + Tickets mode is the same as Replay mode with the addition of one or more tickets to be issued (TICKETS TO AWARD) along

with each replay. In Tickets Only mode one or more tickets will be issued in place of each replay won. In Add a Ball mode all Score Level Replays and Playfield Specials award an extra ball in place of a replay. Also the Match and High Game To Date awards are disabled. However, after the Add a Ball mode is selected, the PLAYFIELD SPECIAL, MATCH PERCENT PAYOUT, and HIGH GAME REPLAYS adjustments may be individually set to whatever setting may be desired. In Novelty mode all Specials award 50,000,000 points, Extra Balls award 20,000,000 points and the Score Replay Levels, Match, and High Game to Date awards are disabled.

NOTE: If either the Replay + Tickets or Tickets Only setting is selected do not set the COIN METER setting to on.

40) TICKETS TO AWARD
This step allows the operator to set the number of tickets to award when a replay has been won. This setting will only apply when the GAME MODE is set to either Replay + Tickets, or Tickets Only.

41) LANGUAGE
This step allows the Test Mode steps to be displayed in English, German, or French.

42) AUTO-PERCENTAGING
If this step is set to on, the Score Replay Levels will be adjusted periodically so that the Game Percent Payout setting will match the actual Replay Percentage displayed in Bookkeeping.

NOTE: If the GAME MODE is set to Add a Ball, the Extra Ball Percentage in bookkeeping is used in place of the Replay Percentage.

43) REPLAY LIMIT
This step may be set to no limit or one per player per game.

44) HIGH GAMES 2-5
This step will determine if High Games to Date (2-5) will be saved or erased when power is turned off.

45) ATTRACT SOUND
This step determines whether or not sounds are enabled during the attract mode (game over).

46) ATTRACT MESSAGE 1
This step is used to enter, enable, or disable an operator message. The message is permanently stored in memory and will be periodically displayed during the attract mode (game over). To enter a message press the Credit button. The current message will be displayed and the cursor position will be indicated by the flashing character. If the current position is blank, a flashing directional arrow will appear. This type of arrow will indicate which direction the cursor will move if the Credit button is pressed. The characters are chosen using the left and right flipper buttons and then entered into memory by pressing the Credit button.

47) ATTRACT MESSAGE 2
This step is used to enter, enable, or disable an second operator message. See step 43 above for details. When both messages are enabled they will be displayed consecutively.

48) RIGHT BOOKKEEPING AUTO-RESET
If this step is set to on, all the short term bookkeeping steps (in brackets) will reset after 2000 plays. Otherwise they will not reset until 10,000 games have been played on the machine.

49) PLAYFIELD SPECIAL
When a playfield special is won, either a replay or an extra ball is awarded to the player based on the setting of this step.

50) REPLAY LEVEL BOOST
This step may be set anywhere from 0 to 990,000,000 in increments of 10,000,000. If set to zero, the boost is disabled. Otherwise the Replay Level will be increased by the boost value after completing a game where a player has won a replay and his skill level has been determined to be above average. The Replay Level will return back to its base level once all of the replays won have been played.

IV. THEORY OF OPERATION

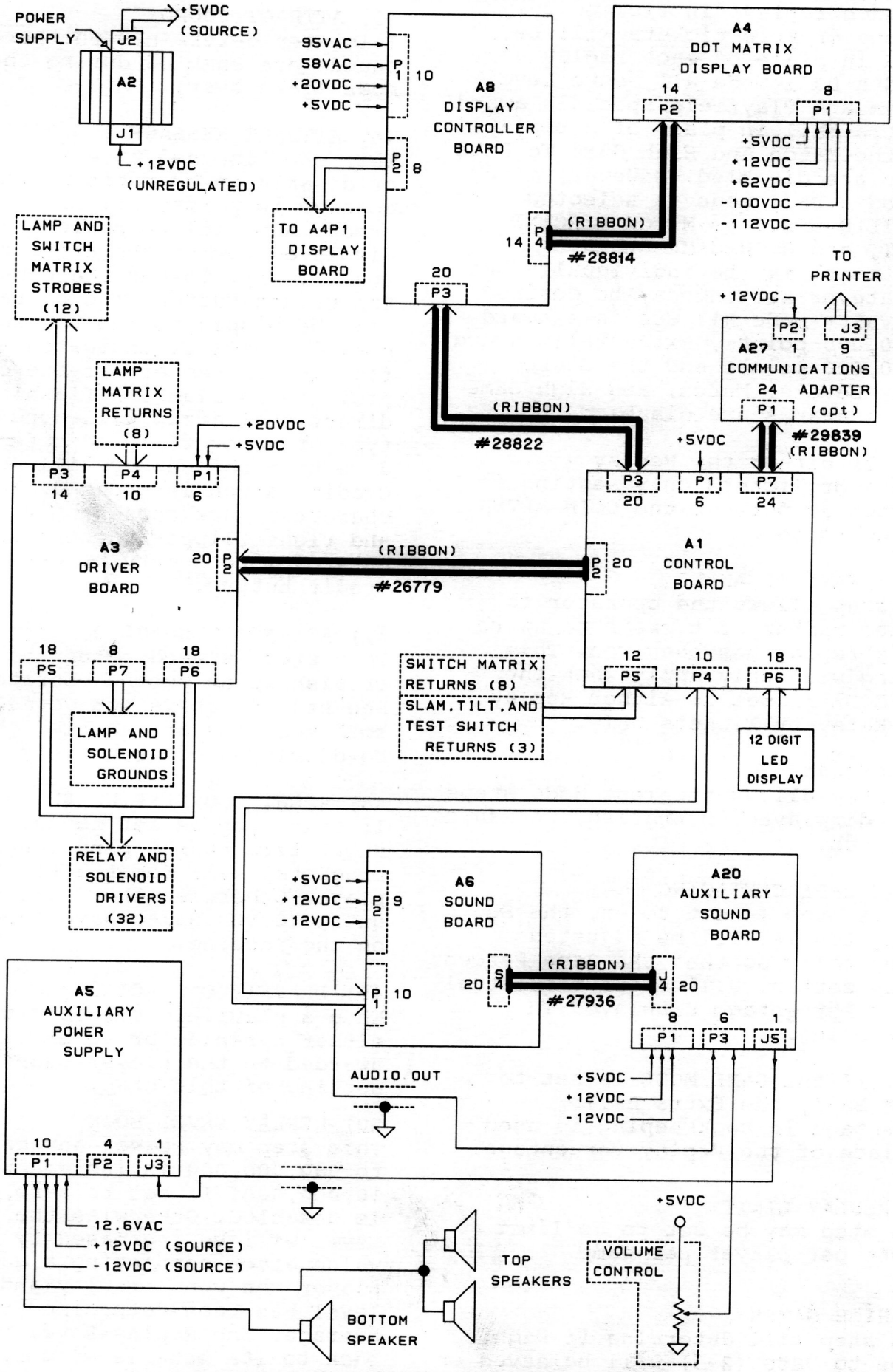

FIGURE 2. SYSTEM 3 BLOCK DIAGRAM

62) GAME BALL TRADE VALUE
Selects the worth of each game ball in millions of points should the player be offered a trade.
EASY - 30 million
*** MEDIUM - 20 million
HARD - 10 million

63) SLAMMIN' JAMMIN' BONUS
Sets the points added to the bonus during SLAMMIN' JAMMIN' multiball.
EASY - 10 million
*** MEDIUM - 5 million
HARD - 3 million

64) LAST BALL SPECIAL
Starts SPECIAL lamps flashing out on last ball if score is under 30,000,000.
** OFF - No
*** ON - Yes

65) HIGH BASKETS SPECIAL
Award a special when HIGH BASKETS has been beaten?
OFF - No
*** ON - Yes

66) HURRY-UP SPECIAL TIME
Sets the speed of the flashout timer for the spot target SPECIAL lamp.
EASY - Slowest
*** MEDIUM
HARD - Fastest

67) HIDDEN FEATURES
Selects the difficulty for completing HIDDEN FEATURES #3 and #4.
*** EASY - Shoot FREE THROW during any event.
Choose 5,000 twice.
HARD - Shoot FREE THROW during only MVP.
Choose 5,000 three times.

68) HIDDEN FEATURES BONUS
Determines when the HIDDEN FEATURE BONUS is collected.
*** EASY - Collected for each ball
** HARD - Collected on last ball only.

69) SHAQ ATTACK CIRCLE ADVANCE
Affects the difficulty of completing the SHAQ ATTACK circle.
*** EASY - Another lamp lit at game over.
** HARD - No lamps added.

70) ALLEY-OOP AWARD
Selects the basket points value for shooting the hoop when ALLEY-OOP is flashing.
EASY - 10
*** MEDIUM - 8
HARD - 5

71) SHAQUILLE FEATURE
Sets the difficulty in completing all letters of SHAQUILLE.
*** EASY - Carry over letters from previous ball.
HARD - Start fresh on every ball.

72) BALL TIME SAFETY
Should a ball drain very quickly, it will be returned to the shooter based upon setting.
VERY EASY - 20 Seconds
EASY - 15 Seconds
*** MEDIUM - 10 Seconds
HARD - 5 Seconds
** VERY HARD - No safety time

73) REDUCED SCORING
*** OFF - JACKPOT scores 20 Million.
SUPER JACKPOT scores 100 Million.
Multiplier set to 3X at start of last ball.
Bonus 3 Million lit at start of ball.
Collect bonus for basket points at end of game.
ON - JACKPOT scores 10 Million.
SUPER JACKPOT scores 50 Million.
Multiplier always starts at 1X.
No bonus lamps lit at start of ball.
No end of game bonus for basket points.

74) HIGH BASKET POINTS
This step adjusts the "HIGH BASKETS" to date. (40-999).

75) MINIMUM GAME TIME
This step allows for continuing play up to an adjusted minimum time. (0 - 4 minutes)

76) REDUCED COACH SPEECH
Reduces the amount of coaching background speech.
*** OFF - Normal
ON - Reduced speech

IV. UTILITIES

Use the left flipper button to choose (highlight) a function and then the right flipper button to select or change the value of the function. Each utility is described below.

A. PRINT

Bookkeeping - all values
Short Bookkeeping - first 8 values

B. PRINTER SET-UP

Type - NSM DATA or SERIAL
Baud Rate - 1200, 2400, 4800, 9600
Data - 7 bit or 8 bit
Parity - none, even, or odd

C. ID NUMBERS

Two six digit numbers can be entered in permanent memory during this step. One is a GAME ID and the other is an ARCADE ID. These two ID's appear on all printouts. Also the GAME ID number will appear in the display on power-up. The left and right flipper buttons alter the digit value and the credit button enters the displayed value into memory and then proceeds to the next digit position.

D. BURN-IN

This function can be used to continuously exercise all the lamps and solenoids in the game.

V. TOURNAMENT MODE

The Tournament Mode switch provides a simple way to alter some of the normal game settings in order to provide for tournament play. The switch is located on a circut board just inside the front door of the game to the lower left. The game must be in a game over condition in order to recognize the switch changing states. When the switch is moved to the "ON" position with the front door open, four Tournament Mode adjustments will appear on the display. These adjustments can be altered by using the left flipper button to select the function and the right flipper button to alter the current setting. Once these settings have been chosen they will remain in permanent memory so that all that has to be done each subsequent time that tournament play is desired is to move the switch to the "ON" position. When the Tournament Mode settings are in effect they override the normal Game Adjustment settings. When the switch is moved to the "OFF" position, all the normal Game Adjustment settings are back in effect.

NOTE: Even if the game will not be used for tournament play, this switch can be used to provide an easy way to set the game for FREE PLAY without affecting any other game settings by setting the remaining three Tournament Mode adjustments to "NORMAL".

Each Tournament Mode adjustment is described below.

*** = Factory Default Setting

1) FREE PLAY
*** OFF = Credits are required to start a game.
ON = A game may be started without any credits posted.

2) GAME FEATURES
*** NORMAL = Normal play.
TOURNAMENT =
Various game features are altered as described below in order to provide the same odds for all players.
a) Reset "Shaq Attack" circle lamps to Jackpot, Bonus 20M, and Level 3 lit at start of each ball.
b) Mystery always alternates award choices between 5,000 or 5,000,000 and 2 basket points.
c) No short ball time safety.

3) SPECIAL/REPLAY
*** NORMAL = Normal play.
POINTS =
Playfield Special awards 50,000,000 points. Match, High Game to Date, and Score Replay Level payouts are disabled.

4) EXTRA BALL
*** NORMAL = Normal play.
POINTS =
Extra Ball awards 20,000,000 points.

III. TEST MODE

SERVICE SWITCH

The switch is actuated when the front door is closed. With the front door closed, all bookkeeping steps are incremented normally. When the front door is opened all bookkeeping steps are frozen at their current values. Any credits that are added with the front door open are recorded in the SERVICE CREDITS bookkeeping steps.

SOUND ADJUSTMENTS

The speaker(s) output is controlled by the volume control located on a circuit board just inside the front door of the game to the lower left.

Turning the volume control counter-clockwise will decrease the volume. Turning it clockwise will increase the volume.

AUTO-PRINT FEATURE

If there is a Communications Adapter installed in the game, the printer will immediately begin printing the first eight bookkeeping values as soon as it is plugged in during game over. If a different printout option is required the Test Mode must be entered first before plugging the printer in so that the immediate printout process does not begin.

POST ADJUSTMENTS

The post at the mouth of the left outlane and the post at the mouth of the right outlane can be positioned for liberal/conservative play. The smaller openings produce a more liberal game.

IV. THEORY OF OPERATION

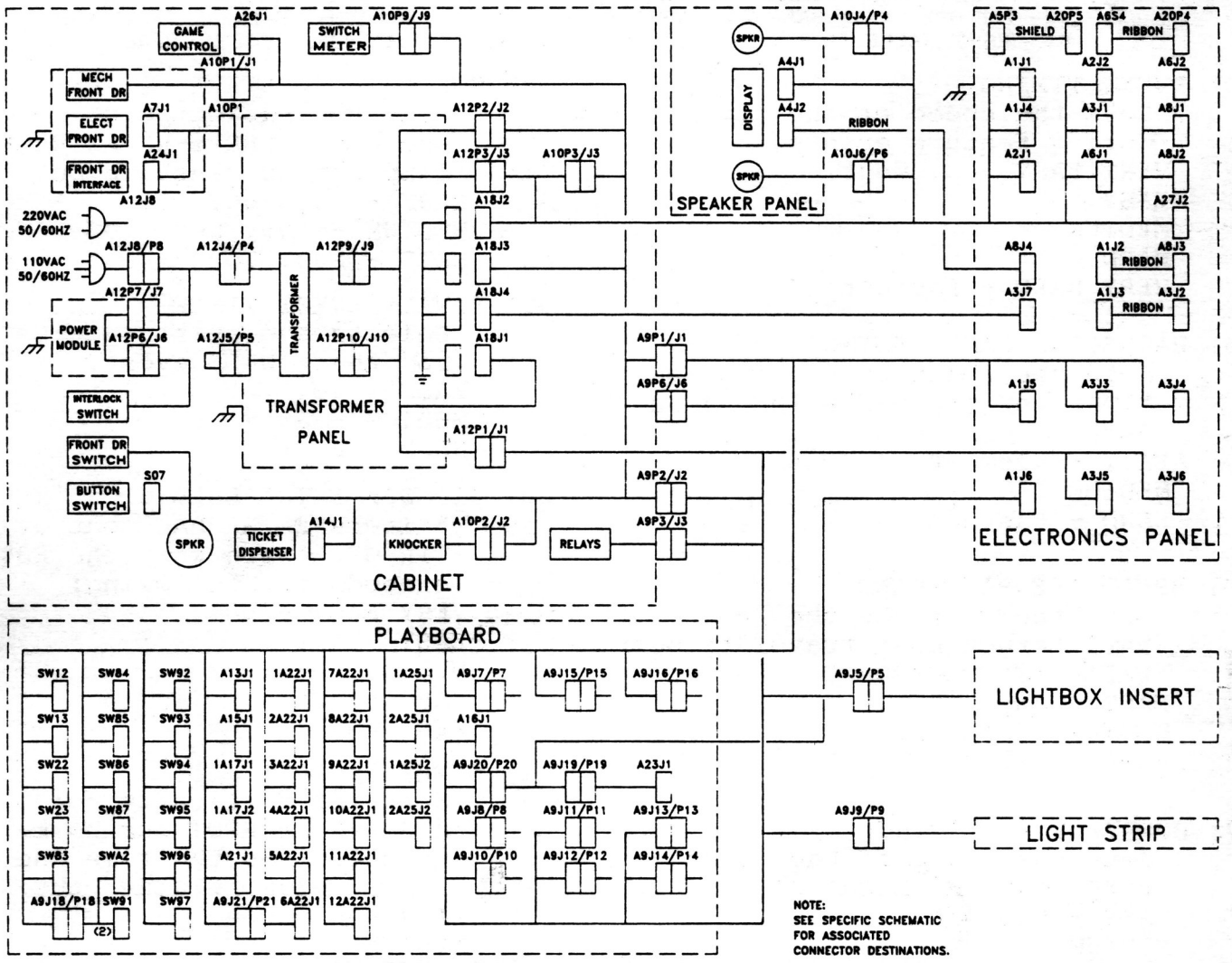

FIGURE 1. INTERCONNECTION DIAGRAM

III. TEST MODE

51) GAME RESTART
This step is used to enable or disable the credit button from starting a new game while currently in a game. If set to ON, a new game will begin when the credit button is pressed if there are any remaining credits. If set to OFF, a new game cannot be started until the current game has ended.

52) GAME INACTIVITY TIMER
This timer can be used to cause a game to go to game over automatically if there is no activity on the playfield for a specified time period. This period can be set from one to nine minutes. Setting this step to zero disables the timer.

OPERATOR ADJUSTMENT SETTINGS
(*** = ENGLISH & GERMAN FACTORY DEFAULT SETTING)
(** = FRENCH FACTORY DEFAULT SETTING)

53) GAME DIFFICULTY
THE ADJUSTMENTS LISTED IN THE TABLE BELOW ARE AUTOMATICALLY SET AS INDICATED IN THE TABLE UNLESS FINE-TUNE IS SELECTED USING THE RIGHT FLIPPER BUTTON. IF FINE-TUNE IS SELECTED, EACH STEP IN THE TABLE CAN BE ADJUSTED INDIVIDUALLY. OTHERWISE THESE STEPS ARE SKIPPED. WHEN FINE-TUNE IS SELECTED, ALL SETTINGS REVERT BACK TO THE FACTORY DEFAULT SETTINGS AS SHOWN IN THE TABLE BELOW.

STEP				***	**	
53	GAME DIFFICULTY	VERY EASY	EASY	MEDIUM	HARD	VERY HARD
54	EVENT TIMING	VERY EASY	EASY	MEDIUM	HARD	VERY HARD
55	BACKBOARD LAMP TIMING	EASY	EASY	MEDIUM	HARD	HARD
56	BREAK THE BACKBOARD	EASY	EASY	MEDIUM	MEDIUM	HARD
57	HURRYUP EB TIMING	EASY	EASY	MEDIUM	MEDIUM	HARD
58	HURRYUP EB START	EASY	MEDIUM	MEDIUM	MEDIUM	HARD
59	FINALS EVENT TIMER	EASY	EASY	MEDIUM	MEDIUM	HARD
60	TIP OFF EXTRA BALL %	VERY EASY	EASY	MEDIUM	HARD	VERY HARD
61	SUPER JACKPOT	EASY	MEDIUM	MEDIUM	MEDIUM	HARD

54) EVENT TIMING
Sets the speed of the timer during feature events.
VERY EASY - Slowest
EASY
MEDIUM
HARD
VERY HARD - Fastest

55) BACKBOARD LAMP TIMING
Sets the speed of the flashout timer for the BREAK THE BACKBOARD lamp.
EASY - Slowest
MEDIUM
HARD - Fastest

56) BREAK THE BACKBOARD
Sets the distance the Vari-target must travel to score BREAK THE BACKBOARD.
EASY - Any hit
MEDIUM - Half way
HARD - All the way back

57) HURRY-UP EB TIMING
Sets the speed of the flashout timer for the EXTRA BALL lamp.
EASY - Slowest
MEDIUM
HARD - Fastest

58) HURRY-UP EB START
Sets the basket point levels where the HURRY-UP EXTRA BALL lamp starts flashing out.
EASY - 50, 200, 700
MEDIUM - 100, 200, 700
HARD - 200, 700

59) FINALS EVENT TIMER
Selects the starting time value for the FINALS event.
EASY - 40
MEDIUM - 30
HARD - 20

60) TIP OFF EXTRA BALL %
Filters EXTRA BALL out of the TIP OFF award when the EB% exceeds the following:
VERY EASY - 50%
EASY - 40%
MEDIUM - 30%
HARD - 20%
VERY HARD - 10%

61) SUPER JACKPOT
Sets the difficulty for scoring a SUPER JACKPOT during multiball by selecting the time the SUPER JACKPOT lamp flashes out.
EASY - Slowest
MEDIUM
HARD - Fastest

IV. THEORY OF OPERATION

A. CONTROL BOARD (A1)

The Control Board is supplied with 5vdc (A1P1) from the Power Supply (A2P2). The data contained in ram (U3) is kept valid when power is turned off by the lithium battery (BAT1) and controller (U6).

NOTE: When replacing either the battery, ram, or the controller there may be a message that appears in the display on power up the first time that indicates a low battery condition. If this occurs, turn the power off and back on again. The board should power up normally this time. If not, there is another problem on the board.

The Control Board can accomodate either a 27512 or a 27256 Eprom. JP1 must be installed for a 27512 or JP2 for a 27256 Game Prom. A 4 Mhz oscillator is configured using U17,R1,R2,C22,C23, and XTAL1. The oscillator output is then divided by 2 to a 2Mhz clock by U18 which is used as the input clock to the 65C02 (U1) microprocessor. The clock output of U1 (pin 39) is used as a sync signal for reading from or writing to the peripheral devices.

Two versatile interface adapters (U4,U5) are used to develop the necessary control signals for the system. The display connector (A1P3) is comprised of several signals. U4-15 and U4-17 are used as inputs to receive data from the Display Controller Board. Data is output to the Display Controller Board by U7 (BD0-BD7) and then latched by pulsing the DS0 line at U9-4. The output at DS1 (U9-5) is used to reset the Display Controller Board if it does not respond to data output by the Control Board.

The Driver Board connector (A1P2) contains all the signals necessary to operate the lamp and switch matrix strobes, the lamp matrix returns, and the solenoids. The lamp clear (LCLR), lamp strobe (LSTB), and lamp strobe data (LDATA) are generated by U4-12,U4-11, and U4-10 respectively. The appropriate lamp return data during each active lamp strobe is output by U7 and latched into U5 on the Driver Board by the lamp return data strobe (LDS). The solenoid data is output by U7 (BD0-BD7) and latched into the appropriate Driver Board device (U1-U4) by the solenoid strobes (SS0-SS3).

The switch matrix returns are input at A1P5, buffered by U19 and U20 and then input to U4. Discrete inputs are provided at A1P5 for the slam, tilt, and test switches.

The connection to the Sound Board (A1P4) is made up of eight sound data lines (SD0-SD7), a return line (SRET), and a reset line (MR).

A reset circuit is configured using U13,U14,R3, and C24. When power is applied to the system, the microprocessor reset pin (U1-40) is held low for approximately 10 milliseconds. The system can also be reset by pressing the switch (SW1) on the board. Whenever a reset occurs the master reset signal (MR) (U18-9) is held low until the display strobe (DSTB) becomes active. At this point the master reset goes high which enables the peripheral IC's on the Display Board and Driver Board to accept data.

A watchdog circuit is employed to monitor both the display digit strobe and the lamp strobe. This circuit is made up of U11,U12,U13,U16,R5,R6,R29, R32,R33,C20,C21,C28, and C29. If either the display strobe (DSTB) or the lamp strobe (LSTB) is missing for 330 milliseconds the system will be reset. The system will also be reset if the supply voltage drops below 4vdc. This voltage monitor is configured using U21,VR1,D1,D2,R34, and R35.

B. POWER SUPPLY (A2)

The transformer panel delivers 12vdc to the input of the power supply. The regulated output voltage should be set to 5vdc by using potentiometer R3. This voltage is then supplied to the Control Board (A1), Driver Board (A3), Display Board (A4), Sound Board

(A6), Display Controller Board (A8), and any other auxillary board which may require it.

C. DRIVER BOARD (A3)

Two voltages are supplied to this board at A3P1. The 5vdc is supplied from the Power Supply (A2) and the 20vdc is supplied from the transformer panel. The 20vdc is used to source the controlled lamps and the switch matrix. The Driver Board receives its data at A3P2 from the Control Board (A1P2). Solenoid data is latched into U1-U4. Lamp return data is latched into U5. Lamp and switch strobe data is shifted through U6 and U7. The comparators (U10,U11) are used to protect the MOSFETS (Q33-Q49). If a sensed input voltage exceeds the reference voltage (Vref), the corresponding MOSFET is turned off immediately following the lamp clear pulse (LCLR) supplied by U12 thus limiting the duty cycle. If the master reset signal (MR) is held low all lamps and solenoids will be disabled.

D. DISPLAY CONTROLLER (A8)

This board is comprised of the power supply section and the digital section. The power supply is used to generate the necessary voltages that are required to power the Display Board. All voltages are input at A8P1 and then output to the Display Board at A8P2.

The digital section controls the information which appears in the display and also the refresh of the display information. The clock circuit runs at 3.579 MHz and is divided by two through U5 and then fed to the microprocessor (U1-37) as the master clock. The LED on the board will flash if the microprocessor (U1) is running properly. A controller chip (U2) is used to refresh the Display Board independent from the code which is being executed by the microprocessor (U1). U1 uses the data bus during the phase 2 portion of the clock while U2 uses it during the phase 1 portion. The address lines from both U1 and U2 are multiplexed through U9-U11 to determine which device has control of the ram (U4). The necessary data is then output to the Display Board at A8P4. Data is both transmitted and received from the Control Board at A8P3. If the Control Board cannot successfully communicate with the Display Controller Board it will attempt to reset the Controller Board by sending a negative going signal on A8P3-14 (DS1).

E. DISPLAY BOARD (A4)

The Display Board consists of a 128 column X 32 row gas plasma display. The drive electronics located on the backside of the board convert low voltage serial data in to high voltage parallel data out for driving the display. The column drivers contain output latches so that column data for the following row can be entered while the present row is being displayed. All voltages required by the display are input at A4P1. All control signals needed to multiplex the display are input at A4P2. The Display Controller Board sends 128 bits of serial column data on the SDATA line for every row of display information. The data is shifted through the driver IC'c by the dot clock signal (DCLK). The column data for a particular row is then latched by the column latch (CLATCH) signal. The row clock (RCLK) signal is used to clock the row driver data (RDATA) through the row driver IC. There is only one active row at a time. Between rows the display enable (DE) signal is used to prevent the display from flickering.

F. SOUND BOARD (A6)

The Sound Board consists of two 6502 microprocessor systems, a dual DAC, an input port to receive commands from the system Control Board, and a low level audio output at A6P2-9 which is sent to the summing amplifier located on the Auxiliary Sound Board (A20) for amplification.

The Sound Board requires three supply voltages +5vdc, +12vdc, and -12vdc. In addition, a power-up reset signal is required from the Control Board. If a manual reset is desired, pressing SW2 will reset both processors.

IV. THEORY OF OPERATION

A 4MHz oscillator is configured with R11, R12, C14, C15, C22, XTAL1, and T1. This clock is then divided down by S1 into either a 2MHz or 1MHz clock signal for the processors N1 and T3. A 250 KHz clock signal from S1-11 is used by the programmable timer section consisting of N5, H5, T5, and K5.

Eight lines from the Control Board are input at A6P1 on the Sound Board and sent to the two input code latches A3 and B2. When any of these inputs goes low (except for A6P1-9 when JP7 is not installed) A2-8 goes high which causes the input code data to be latched into A3 and B2. Also at the same time the flip-flops contained in A4 are clocked which cause the IRQ input of each microprocessor to go low. The outputs of A4 will remain in the low state until each flip-flop is cleared by a signal from its associated microprocessor after each IRQ is processed.

The Sound Board is designed to accomodate different types of Eproms. Jumpers JP1, JP2, JP3, and JP4 should be set to their proper positions based on the density of the Eproms being used.

G. AUXILIARY SOUND BOARD (A20)

The Auxiliary Sound Board contains a sound generator YM2151 (U9) and a sound/speech generator MSM6295 (U1). Both of these IC's operate under the control of the T3 microprocessor on the master Sound Board (A6). The sound generator YM2151 responds to its commands by sending serial data to the YM3014 DAC (U10). The DAC then converts this data into an analog signal which is filtered through a series of op-amps and then sent to the main summing amplifier (U11).

A 74HCT74 IC (U6) is used to divide the 4 MHz clock signal present at A20P4-9 into both a 1 MHz and 2 MHz signal which is selectable via JP3 (2 MHz) or JP4 (1 MHz). This signal is then used as the master clock for the speech generator (U1). When the speech generator (U1) receives a command, it then retrieves its data from the Eproms (U4, U5). The analog output at pin 36 (DAO) is then sent through an active filter network and then to the main summing amplifier (U11).

The output of the main summing amplifier (U11-7) is input to a voltage controlled amplifier (VCA) (U13). The volume is controlled by a potentiometer located just inside the front door of the game. The potentiometer acts as a resistor divider which supplies a 0 to 5 volt signal to the VCA at U13-2. The output of the VCA is then sent to Auxiliary Power Supply (A5) for amplification.

H. SENSOR BOARD (A15)

This board is used to detect if any flipper is energized and then inputs the data to the Control Board to be processed. This board therefore eliminates the need for a second switch to be used on the flipper assembly itself. U1 is an optocoupler device which converts the input signal from the flipper circuit when energized to a signal which can be recognized by the Control Board as a valid switch closure.

I. OPTICAL INTERFACE (A25)

The optical interface assembly generates and receives the infrared light pulses needed to optically detect the ball breaking an infrared light beam. It also provides a visual indication that the interface assembly is functioning properly.

This method of detection transmits infrared light pulses from an opto LED to an opto phototransistor receiver. The LED light pulses are generated from a switch strobe that is buffered and current amplified by two sections of the LM339 voltage comparitor (output pins 1 & 2) and transistor Q2.

When no ball is present, the light pulses reach the opto receiver which passes the pulses 180 degrees out of phase with the switch strobe on to two additional sections of the comparitor (pins 9 & 10). Because the strobe pulses and receive pulses are out of phase, they cancel at resistors R1 & R3 and keep comparitor

output pin 13 high therefore preventing Q1 from passing strobes on to the switch return line.

As a ball passes between the opto transmitter and receiver, the light beam is broken. Now, with no out of phase pulses coming from the receiver, the strobe appears at comparitor inputs 9 & 10. Comparitor output pin 13 begins pulsing low and passes the strobes through Q1 to the return line to signal a closed switch. Also positive strobe pulses at output pin 14 of the comparitor turn Q3 on and light LED D2. D2 lit indicates a broken light beam and a closed optical switch.

J. SMART SWITCH™ (Piezo Film Sensor)

These devices take the place of the normal contact point type switches used for sensing the ball on various different devices in the game. These devices should not require any adjustment. DO NOT ATTEMPT TO ADJUST THE WIDE CANTILEVER BEAM used in a switch assembly. This could cause permanent damage to the device. The lifetime of these switches has been determined to be over 10 million cycles. The main advantage of these switches is the fact that they cannot be contaminated by such elements as moisture, dust, or smoke. Each switch assembly consists of a wide cantilever beam which has a piezo film sensor element laminated to its surface. When this beam is deflected, it induces a strain on the laminated piezo film sensor element. As the beam is returning to its rest position it generates an output voltage which triggers the on board circuit. This circuit then generates a momentary output which resembles that of contact points being closed. The switch design used in rollover and spot target applications generates an output signal as the beam which contains the piezo film returns to its rest position after it is actuated. The switch design used for pop bumpers generates an output signal as the beam is deflected in order to provide an immediate response by the pop bumper solenoid. This immediate response type of switch can be distinguished from the other because either the film itself or the printed circuit board will be colored blue. BE CAREFUL not to interchange these two different types of switches.

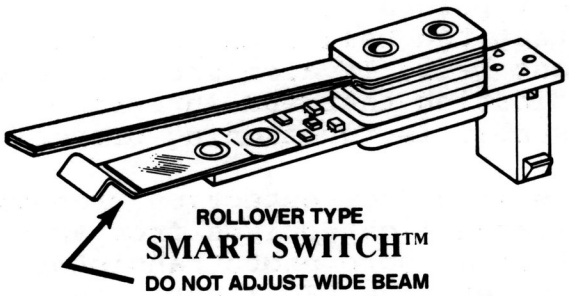

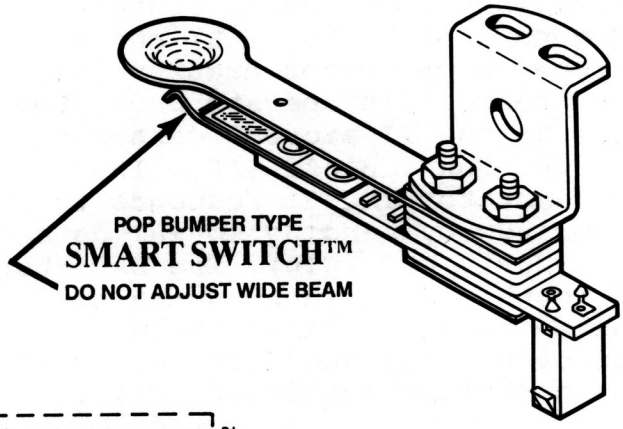

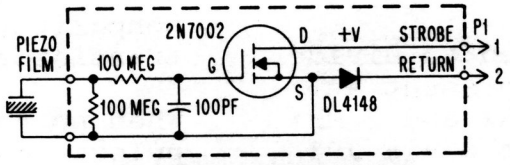

SCHEMATIC REPRESENTATION

NOTES

V. GENERAL INFORMATION

A. PRINTED CIRCUIT BOARDS ARE DESIGNATED AS FOLLOWS:

A1 - Control Board
A2 - Power Supply
A3 - Driver Board
A4 - Dot Matrix Display
A5 - Auxiliary Power Supply
A6 - Sound Board
A8 - Display Controller
A11 - Auxiliary Driver Board
A13 - Resistor Board
A15 - Sensor Board
A16 - Filter Board
A17 - Diode Board
A20 - Auxiliary Sound Board
A22 - LED Board
A25 - Optical Interface Board
A26 - Game Controls Board
A27 - Communications Adapter (Optional)
A28 - Interface Board (Miscellaneous)

Printed circuit board connectors will be labeled AX-JX. For example, A3-J4 is the connector J4 to the driver board (A3).

B. WIRE COLORS ARE SHOWN AS NUMBERS:

0 Black
1 Brown
2 Red
3 Orange
4 Yellow
5 Green
6 Blue
7 Violet
8 Gray
9 White

For example, 688 is a BLUE-GRAY-GRAY striped wire.

C. FUSE AND COIL INFORMATION

TRANSFORMER PANEL

F1	Line Input	110V AC	8 Amp SLO-BLO
		220V AC	4 Amp SLO-BLO
F2	Primary Power	110V AC	5 Amp SLO-BLO
		220V AC	2-1/2 Amp SLO-BLO
F3	Display		3/8 Amp SLO-BLO
F4	Display		3/8 Amp SLO-BLO
F5	Power Supply		4 Amp SLO-BLO
F6	Controlled Lamps and Switches		10 Amp SLO-BLO
F7	Solenoids		8 Amp SLO-BLO
F8	Lightbox Illumination		15 Amp
F9	Playfield Illumination		10 Amp
F10	Auxiliary Power Supply		3 Amp SLO-BLO
F11	Auxiliary Power Supply		3 Amp SLO-BLO

NOTE:
FUSE DESIGNATIONS F12 THRU F14 NOT USED.

V. GENERAL INFORMATION

PLAYBOARD FUSES, COILS/COLORS/SLEEVES

FUSE	RATING	PART NO.	USAGE	COIL/COLOR	SLEEVE
F15	1-1/2 AMP SLO-BLO	EL-24	LEFT KICKING RUBBER (Q1)	5195 (WHITE)	5064
F16	1-1/2 AMP SLO-BLO	EL-24	RIGHT KICKING RUBBER (Q2)	5195 (WHITE)	5064
F17	4 AMP SLO-BLO	EL-33	BOTTOM LEFT FLIPPER	29876 (ORANGE)	5065
F18	2 AMP SLO-BLO	EL-7	TOP LEFT FLIPPER	26646 (BLUE)	5065
F19	4 AMP SLO-BLO	EL-33	BOTTOM RIGHT FLIPPER	29876 (ORANGE)	5065
F20	2 AMP SLO-BLO	EL-7	TOP RIGHT FLIPPER	26646 (BLUE)	5065
F21	1/2 AMP SLO-BLO	EL-20	BALL RELEASE (Q28)	26451 (YELLOW)	5065
			OUTHOLE (Q29)	26451 (YELLOW)	5065
			HOLE KICKER (Q6)	26450 (PINK)	5064
			#1 TRIP (Q8)	26452 (PINK)	----
			#2 TRIP (Q9)	26452 (PINK)	----
			#3 TRIP (Q10)	26452 (PINK)	----
			#4 TRIP (Q11)	26452 (PINK)	----
			#5 TRIP (Q12)	26452 (PINK)	----
F22	1/2 AMP SLO-BLO	EL-20	PLUNGER GATE (Q7)	26451 (YELLOW)	5065
F23	2 AMP SLO-BLO	EL-7	5 BANK RESET (Q3)	19300 (ORANGE)	25605
F24	1-1/2 AMP SLO-BLO	EL-24	TOP UPKICKER (Q4)	16570 (GREEN)	21411
F25	1 AMP SLO-BLO	EL-6	BOTTOM UPKICKER (Q5)	17876 (TAN)	21411

V. GENERAL INFORMATION

D. COIL CHART

SOLENOID COILS					
PART NUMBER	WHERE USED	RESISTANCE (OHMS)	NUMBER OF TURNS	WIRE GAUGE	WRAPPER COLOR
A-19300	GENERAL PURPOSE	7.8	1075	#25	ORANGE
A-5195	GENERAL PURPOSE	12.3	1305	#26	WHITE
A-16570	GENERAL PURPOSE	15.5	1450	#27	GREEN
A-17876	GENERAL PURPOSE	24	1750	#28	TAN
A-26450	GENERAL PURPOSE	42	2400	#29	PINK
A-26451	GENERAL PURPOSE	65.8	3000	#30	YELLOW
A-30297	GENERAL PURPOSE	66.5	2750	#30	BLUE
A-26926	3-BANK RESET	32.8	2650	#27	BLUE
A-29876	FLIPPER (NEW UNIT)	2.36/202	560/3325	#23/#33	ORANGE
A-25959	FLIPPER (NEW UNIT)	3.85/202	720/3325	#24/#33	RED
A-26646	FLIPPER (NEW UNIT)	4.57/201	725/3470	#25/#33	BLUE
A-28740	FLIPPER (NEW UNIT)	6.02/207	790/3600	#26/#33	TAN
A-27642	FLIPPER (NEW UNIT)	9.1/203	950/3700	#27/#33	YELLOW
A-27643	FLIPPER (OLD UNIT)	11.4/202	960/3670	#28/#33	GREEN
A-30468	FLIPPER (OLD UNIT)	11.59/269	960/4700	#28/#33	WHITE
A-27926	GENERAL PURPOSE	64.7	3475	#29	BLUE
RELAY COILS					
PART NUMBER	WHERE USED	RESISTANCE (OHMS)	NUMBER OF TURNS	WIRE GAUGE	WRAPPER COLOR
A-26452	DROP TAR. TRIP	137	2450	#35	PINK
A-16890	GENERAL PURPOSE	231	4000	#35	ORANGE

VI. WIRING AND SCHEMATIC DIAGRAMS, PARTS LISTS

TABLE OF CONTENTS

PAGE(S)

DIODE BOARD (A17)
COMPONENT LOCATION AND PART LIST.....28

FILTER BOARD (A16)
COMPONENT LOCATION.....28

GAME CONTROLS BOARD (A26)
COMPONENT LOCATION AND PARTS LIST.....28

RESISTOR BOARD (A13)
COMPONENT LOCATION AND PARTS LIST.....28

LED DISPLAY BOARD (A23)
SCHEMATIC DIAGRAM.....29-29A
COMPONENT LOCATION AND PARTS LIST.....29A

SENSOR BOARD (A15)
COMPONENT LOCATION AND PARTS LIST.....30
SCHEMATIC DIAGRAM.....30

CONTROL BOARD (A1)
COMPONENT LOCATION AND PARTS LIST.....30A
SCHEMATIC DIAGRAM.....31-33

DRIVER BOARD (A3)
SCHEMATIC DIAGRAM.....34-36
COMPONENT LOCATION AND PARTS LIST.....37

OPTO TRANSMITTER, OPTO RECIEVER
OPTICAL INTERFACE BOARD (A25)
COMPONENT LOCATION AND PARTS LIST.....38,39

AUXILIARY POWER SUPPLY (A5)
COMPONENT LOCATION AND PARTS LIST.....40
SCHEMATIC DIAGRAM.....40

AUXILIARY SOUND BOARD (A20)
COMPONENT LOCATION AND PARTS LIST.....41
SCHEMATIC DIAGRAM.....41,42

SOUND BOARD (A6)
COMPONENT LOCATION AND PARTS LIST.....43
SCHEMATIC DIAGRAM.....44,45

DISPLAY CONTROLLER (A8)
SCHEMATIC DIAGRAM.....46-48
COMPONENT LOCATION AND PARTS LIST.....49

DOT MATRIX DISPLAY (A4)
FRONT VIEW, WIRING DIAGRAM.....49

SWITCH MATRIX
SCHEMATIC DIAGRAM.....50,51

POWER SUPPLY (A2)
COMPONENT LOCATION AND PARTS LIST.....52
SCHEMATIC DIAGRAM.....52

LAMP MATRIX
SCHEMATIC DIAGRAM.....53,54

PLAYBOARD
SCHEMATIC DIAGRAM.....55,56

TRANSFORMER PANEL
SCHEMATIC DIAGRAM.....57,58

LIGHTBOX/PLAYBOARD
SCHEMATIC DIAGRAM.....59,60

CABINET/FRONT DOOR
SCHEMATIC DIAGRAM.....61,62

ELECTRONIC FRONT DOOR
SCHEMATIC DIAGRAM.....62

VI. WIRING AND SCHEMATIC DIAGRAMS, PARTS LISTS

DIODE BOARD (A17) COMPONENT LOCATION

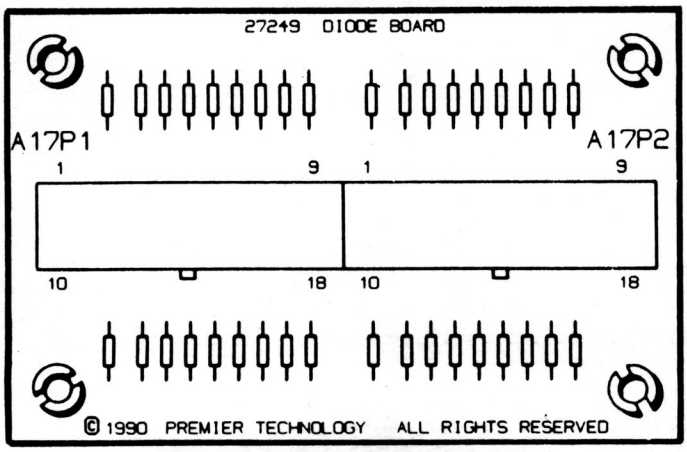

DIODE BOARD (A17) PARTS LIST

REFERENCE	DESCRIPTION	PART NUMBER
1A17	Diode Matrix Assembly	MA-1448
D1-D32	Diode, 1N4148	XO-261
P1, P2	Header, 18 Position	XO-916
R1-R4	Resistor, 220 OHM, 5%, 1/4W	XO-21
	Circuit Board Support (4)	23984

FILTER BOARD (A16) COMPONENT LOCATION

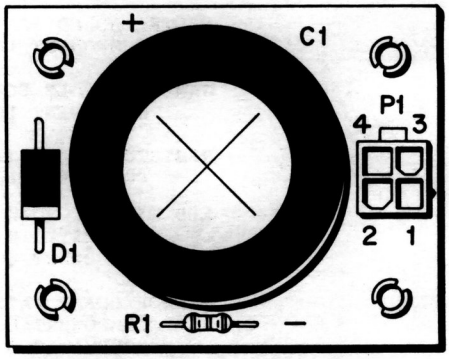

FILTER BOARD (A16) PARTS LIST

REFERENCE	DESCRIPTION	PART NUMBER
	FILTER BOARD ASSEMBLY	MA-1745
C1	CAPACITOR, 2200UF, 100V	XO-923
D1	DIODE, 1N5401	XO-263
R1	RESISTOR, 24K OHM, 5%, 1/4W	XO-10
P1	HEADER, 4 POSITION	XO-909
	CIRCUIT BOARD SUPPORT (4)	23984

RESISTOR BOARD (A13) COMPONENT LOCATION

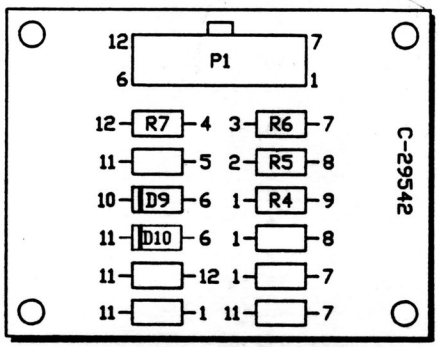

RESISTOR BOARD (A13) PARTS LIST

REFERENCE	DESCRIPTION	PART NUMBER
	RESISTOR BOARD (A13)	30987
D9, D10	DIODE, 1N4004	XO-254
R4-R7	RESISTOR, 220 OHM,5%,1/4W	XO-21
P1	HEADER, 12 POSITION	XO-913
	SPACER,(4)	23984

GAME CONTROLS BOARD (A26) COMPONENT LOCATION

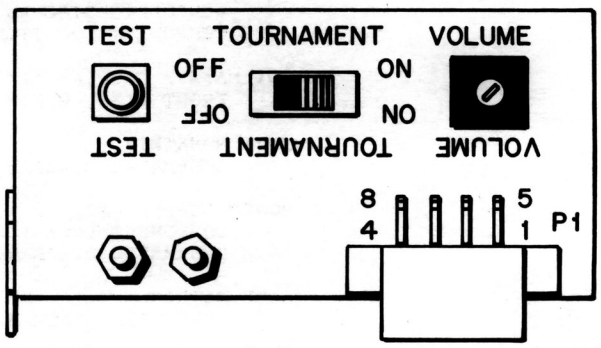

GAME CONTROLS BOARD (A26) PARTS LIST

DESCRIPTION	PART NUMBER
Game Controls Board (A26)	MA-1851
Potentiometer, 10K OHM, 20%,15W	XO-1194
Pushbutton Switch	XO-897
Slide Switch	XO-1193
Header, 8 Position	XO-920
Mounting Bracket	28619
Key Cap, Yellow	XO-1198

VI. WIRING AND SCHEMATIC DIAGRAMS, PARTS LISTS

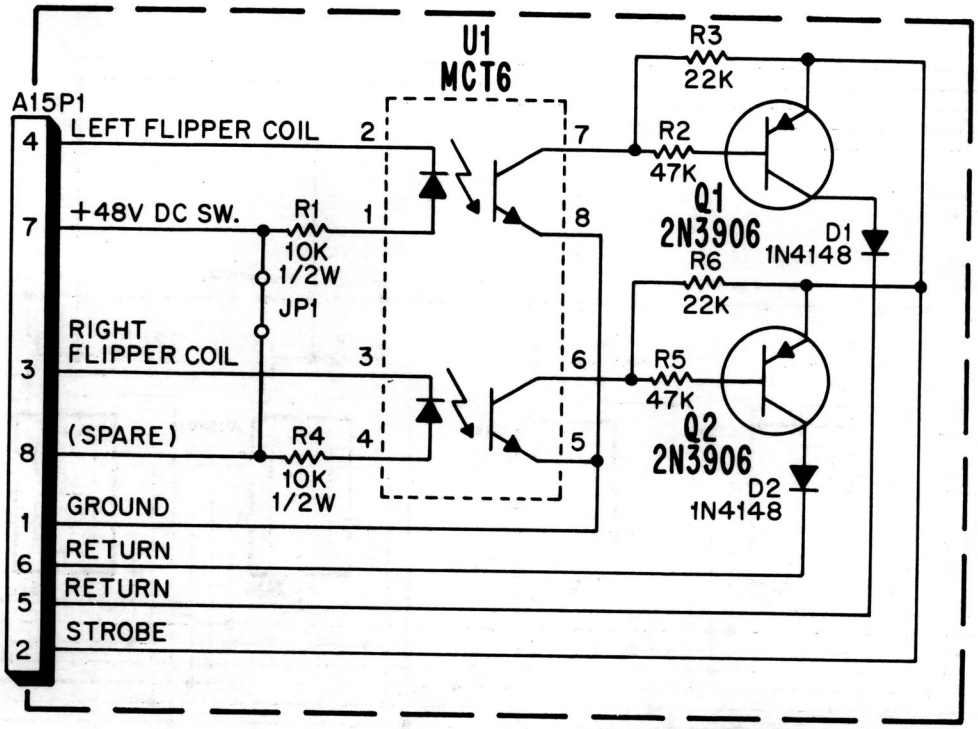

Premier® Technology			
TITLE: SENSOR BOARD (A15) SCHEMATIC DIAGRAM			
DRAWN: J.P.S.	APPROVED: RHM	DATE: 10-12-89	E-27041

SENSOR BOARD (A15) COMPONENT LOCATION

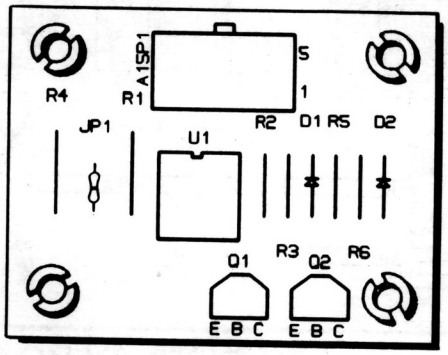

SENSOR BOARD (A15) PARTS LIST

REFERENCE	DESCRIPTION	PART NUMBER
	Sensor Board Assembly (A15)	MA-1334
D1,D2	Diode, 1N4148	XO-261
JP1	Jumper, Resistor, 0 OHM	XO-469
Q1,Q2	Transistor, 2N3906 (PNP)	XO-588
R1,R4	Resistor, 10K Ohm, 5%, 1/2W	XO-62
R2,R5	Resistor, 47K Ohm, 5%, 1/4W	XO-30
R3,R6	Resistor, 22K Ohm, 5%, 1/4W	XO-42
U1	IC, Optocoupler, MCT6	XO-1000
A15P1	Header, 8 Position	XO-911
	Spacer (4)	23984

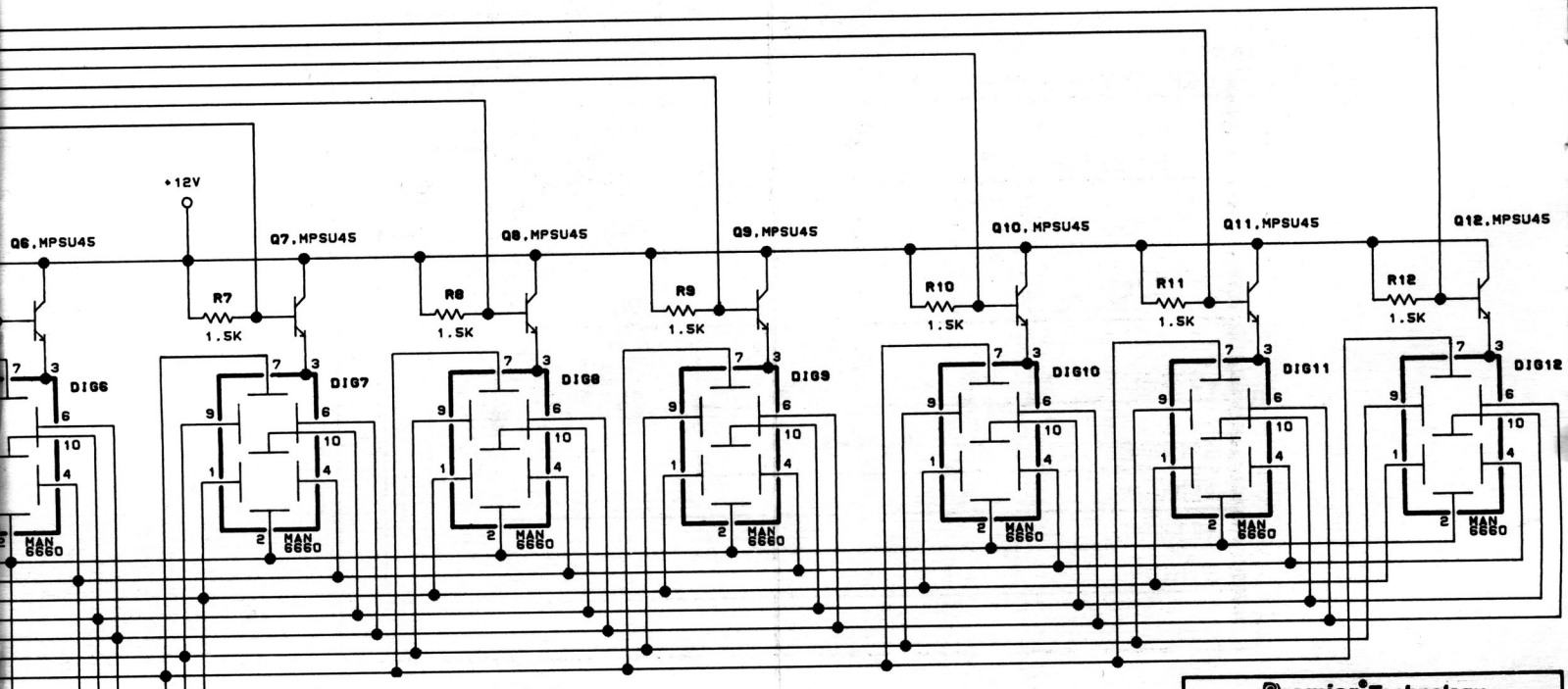

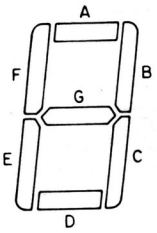

SEGMENT IDENTIFICATION

Premier® Technology			
TITLE: LED DISPLAY BOARD (A23) SCHEMATIC DIAGRAM			
DRAWN: J.B.	APPROVED: RHM	DATE: 12-7-90	E-27856

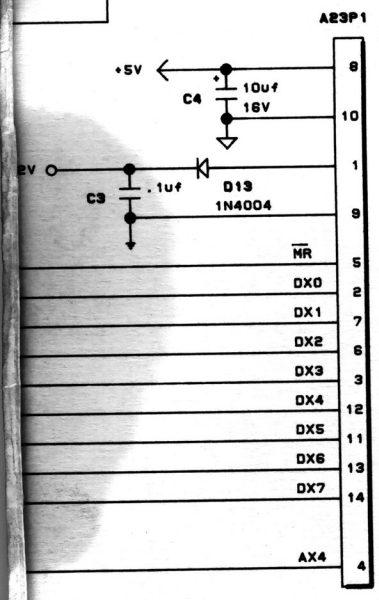

LED DISPLAY BOARD (A23) COMPONENT LOCATION

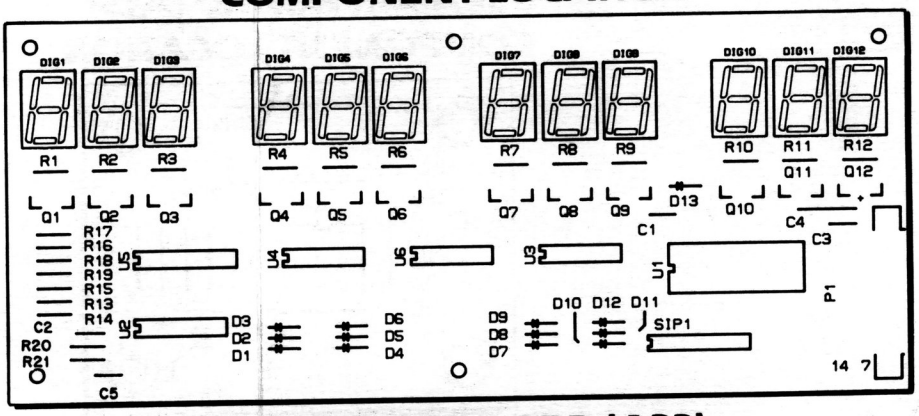

LED DISPLAY BOARD (A23) PARTS LIST

REFERENCE	DESCRIPTION	PART NUMBER
	LED Display Board Assembly (A23)	MA-1568
C1,C2,C3	Capacitor, 0.1UF, +80-20%, 50V	XO-230
C4	Capacitor, 10UF, +80-20%, 16V	XO-846
C5	Capacitor, .001UF, 100V	XO-296
D1-D12	Diode, 1N4148	XO-261
D13	Diode, 1N4004	XO-254
D1-D12	Diode, 1N4148	XO-261
D13	Diode, 1N4004	XO-254
DIG1-DIG12	7 Segment LED, MAN6660	XO-1016
Q1-Q12	Transistor, NPN Darlington, MPS-U45	XO-306
R1-R12	Resistor, 1.5K OHM, 5%, 1/4W	XO-20
R13-R19	Resistor, 18 OHM, 1%, 1/4W	XO-1003
R20	Resistor, 4.7K OHM, 5%, 1/4W	XO-7
R21	Resistor, 100K OHM, 5%, 1/4W	XO-45
SIP1	Resistor Pack, 4.7K OHM, 5% x 8	XO-161
U1	IC, 4 to 16 Decoder, 74HC4514	XO-1017
U2	IC, BCD to 7 Segment, 74HC4511	XO-1005
U3,U4	IC, Buffer, 7417	XO-406
U5	IC, Darlington Driver, ULN2803	XO-1006
U6	IC, Hex Inverter, 74HC04	XO-888
A23P1	14 Pin Right Angle Header	XO-1008

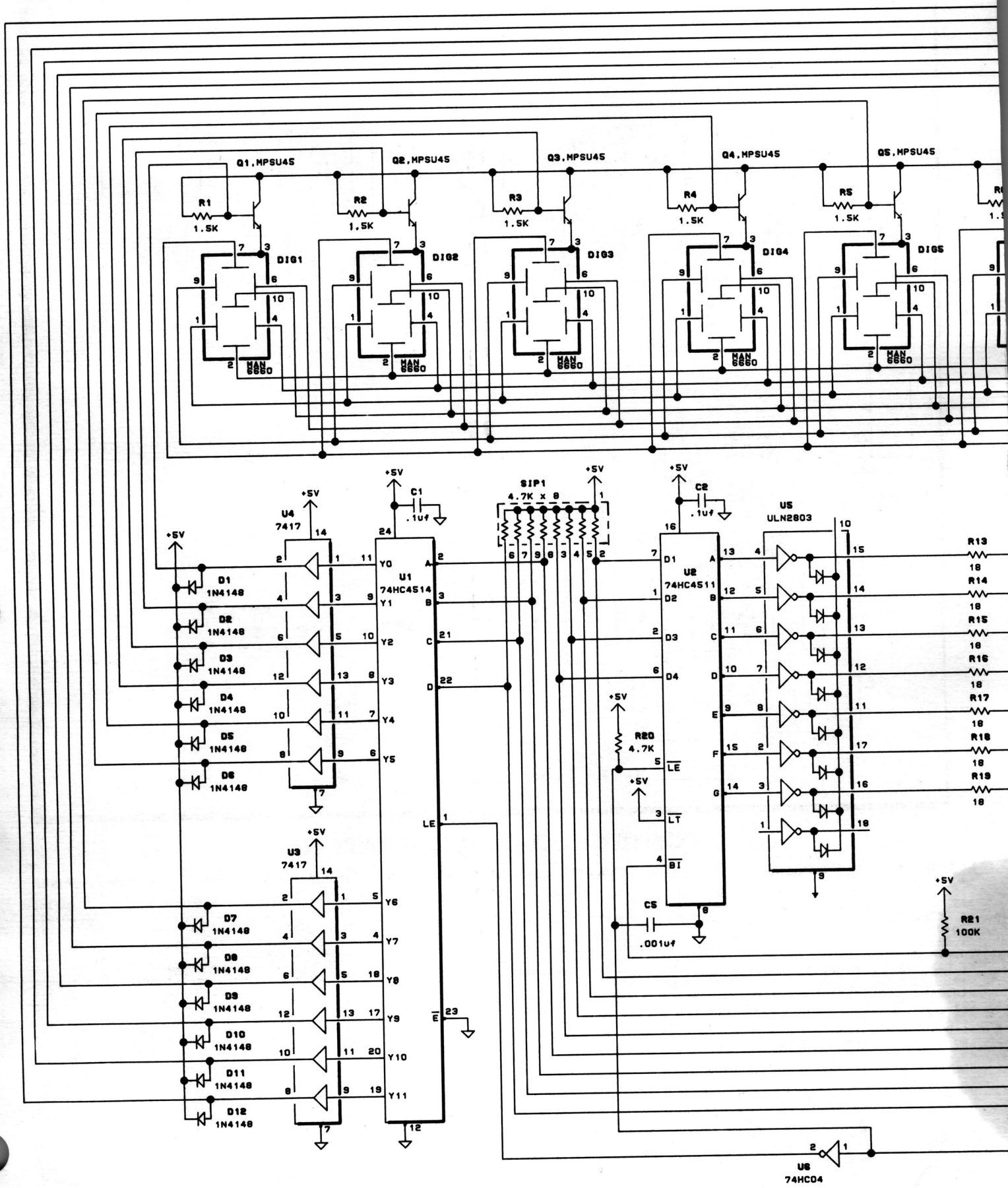
Q1,MPSU45
Q2,MPSU45
Q3,MPSU45
Q4,MPSU45
Q5,MPSU45
R1
1.5K
R2
1.5K
R3
1.5K
R4
1.5K
R5
1.5K
DIG1
DIG2
DIG3
DIG4
DIG5
MAN6660
+5V
C1
.1uf
C2
.1uf
U4
7417
U3
7417
U1
74HC4514
U2
74HC4511
U5
ULN2803
U6
74HC04
SIP1
4.7K x 8
R20
4.7K
C5
.001uf
R21
100K
D1
1N4148
D2
1N4148
D3
1N4148
D4
1N4148
D5
1N4148
D6
1N4148
D7
1N4148
D8
1N4148
D9
1N4148
D10
1N4148
D11
1N4148
D12
1N4148
R13
18
R14
18
R15
18
R16
18
R17
18
R18
18
R19
18
LE
BI
LT

VI. WIRING AND SCHEMATIC DIAGRAMS, PARTS LISTS

CONTROL BOARD (A1) COMPONENT LOCATION

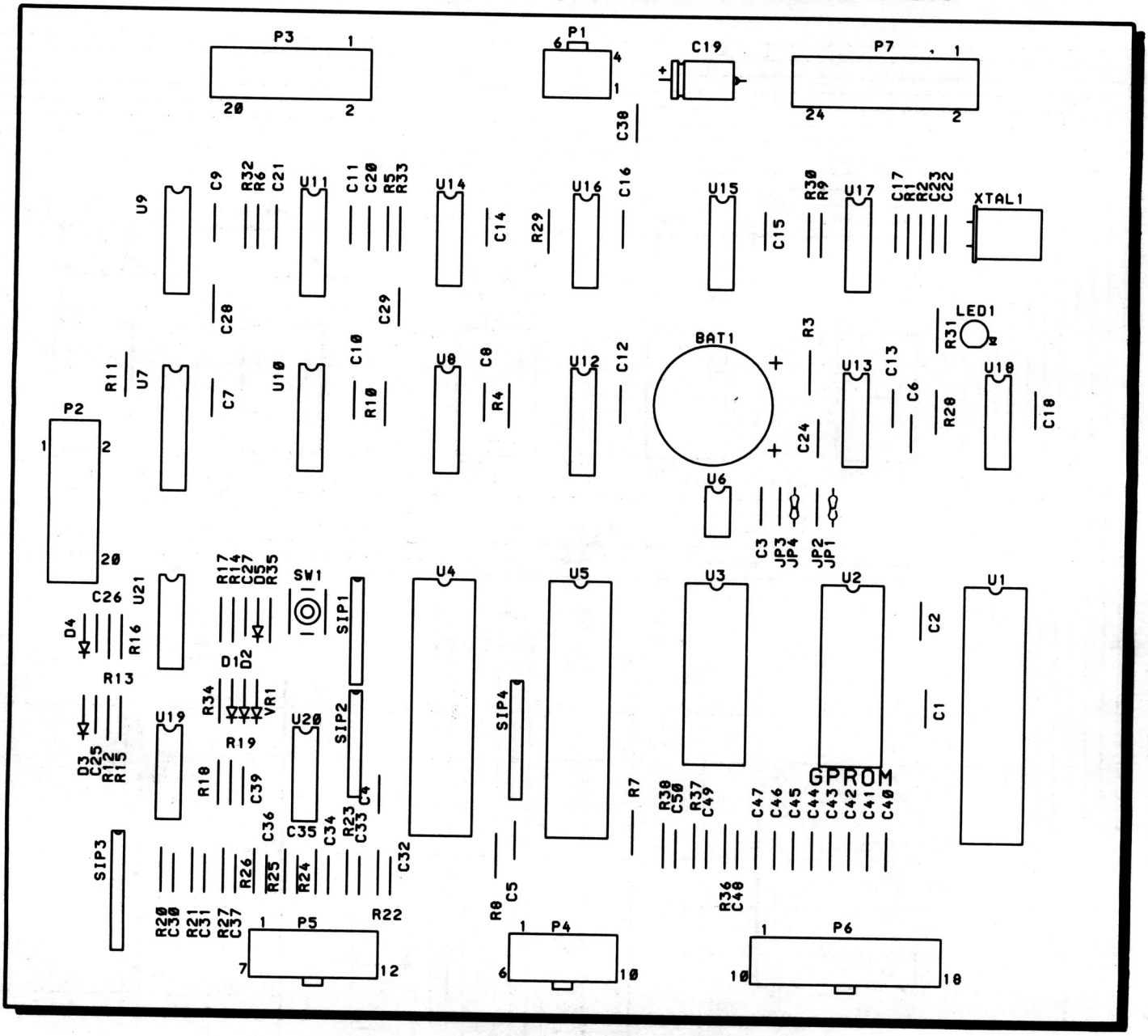

CONTROL BOARD (A1) PARTS LIST

REFERENCE	DESCRIPTION	PART NUMBER
	Control Board Assembly (A1)	MA-1934
BAT 1	Lithium Battery, LM2430, 3V	X0-925
C3, C7-C18, C30-C50	Capacitor, .01UF, +80% -20%, 50V	X0-229
C1,C2,C4 C5,C25,C27	Capacitor, 0.1UF, +80% -20%, 50V	X0-230
C6,C22,C23	Capacitor, 33PF, 10%, 100V	X0-896
C19	Capacitor, 100UF, +80% -20%, 10V	X0-211
C20,C21	Capacitor, 1UF, 20%, 50V	X0-746
C24	Capacitor, .022UF, 10%, 50V	X0-873
C28,C29	Capacitor, 1000PF, 10%, 100V	X0-296
D1-D5	Diode, 1N4148	X0-261
LED 1	LED, MV5752 (Red)	X0-270
R1	Resistor, 22 MEGOHM, 5%, 1/4W	X0-74
R2,R10,R11 R18,R28,R30	Resistor, 10K OHM, 5%, 1/4W	X0-18
R3	Resistor, 560K OHM, 5%, 1/4W	X0-169
R5,R6	Resistor, 680K OHM, 5%, 1/4W	X0-669
R4,R7-R9	Resistor, 3K OHM, 5%, 1/4W	X0-23
R12-R14	Resistor, 2.2K OHM, 5%, 1/4W	X0-27
R15-R17	Resistor, 3.3K OHM, 5%, 1/4W	X0-38
R19-R27, R36-R38	Resistor, 4.7K OHM, 5%, 1/4W	X0-7
R31	Resistor 330 OHM, 5%, 1/4W	X0-34
R32-R33	Resistor, 100K OHM, 5%, 1/4W	X0-45
R34	Resistor, 1K OHM, 5%, 1/4W	X0-5
R35	Resistor, 100 OHM, 5%, 1/4W	X0-28
SIP1,SIP2	Resistor Pack, 10K OHM X 7, 5%, 1/4W	X0-926

REFERENCE	DESCRIPTION	PART NUMBER
SIP3,SIP4	Resistor Pack, 4.7K OHM X 8	X0-161
SW1	Switch, N.O.	X0-897
U1	IC, 65CO2P2, CPU, 2MHZ	X0-927
U3	IC, 6264LP, 8K X 8, Static Ram	XO-781
U4,U5	IC,6522AP, Versatile Interface Adaptor (VIA)	X0-929
U6	IC, DS1210, Non-Volatile Controller	X0-930
U7	IC, 74HCT373, Octal Latch	X0-931
U8	IC, 74HCT138, Decoder	X0-932
U9,U10	IC, 74HCT139, Dual Decoder	X0-933
U11	IC, 74HC123, Dual Multivibrator	X0-934
U12	IC, 74HC161, Binary Counter	X0-935
U13	IC, 74HC14, Schmitt Hex Inverters	X0-936
U14	IC, 74HC11, Triple "And" Gates	X0-937
U15,U16	IC, 74HC00, Quad "Nand" Gates	X0-782
U17	IC, 74HC04, Hex Inverters	X0-888
U18	IC, 74HC74, Dual "D" Flip-Flop	X0-939
U19,U20,U21	IC, LM339, Quad Comparators	X0-583
VR1	Zener Diode, 1N5225B, 3V, 5%	X0-269
XTAL1	Crystal, 4MHZ	X0-366
A1P1	Header, 6 Position	X0-910
A1P2,A1P3	Header, 20 Position (Ribbon)	XO-940
A1P4	Header, 10 Position	XO-912
A1P5	Header, 12 Position	XO-913
A1P6	Header, 18 Position	XO-916
A1P7	Header, 24 Position	XO-1201
	Jumper, Resistor, 0 OHM (2)	XO-469
	Socket, 28 Pin Dip	XO-536

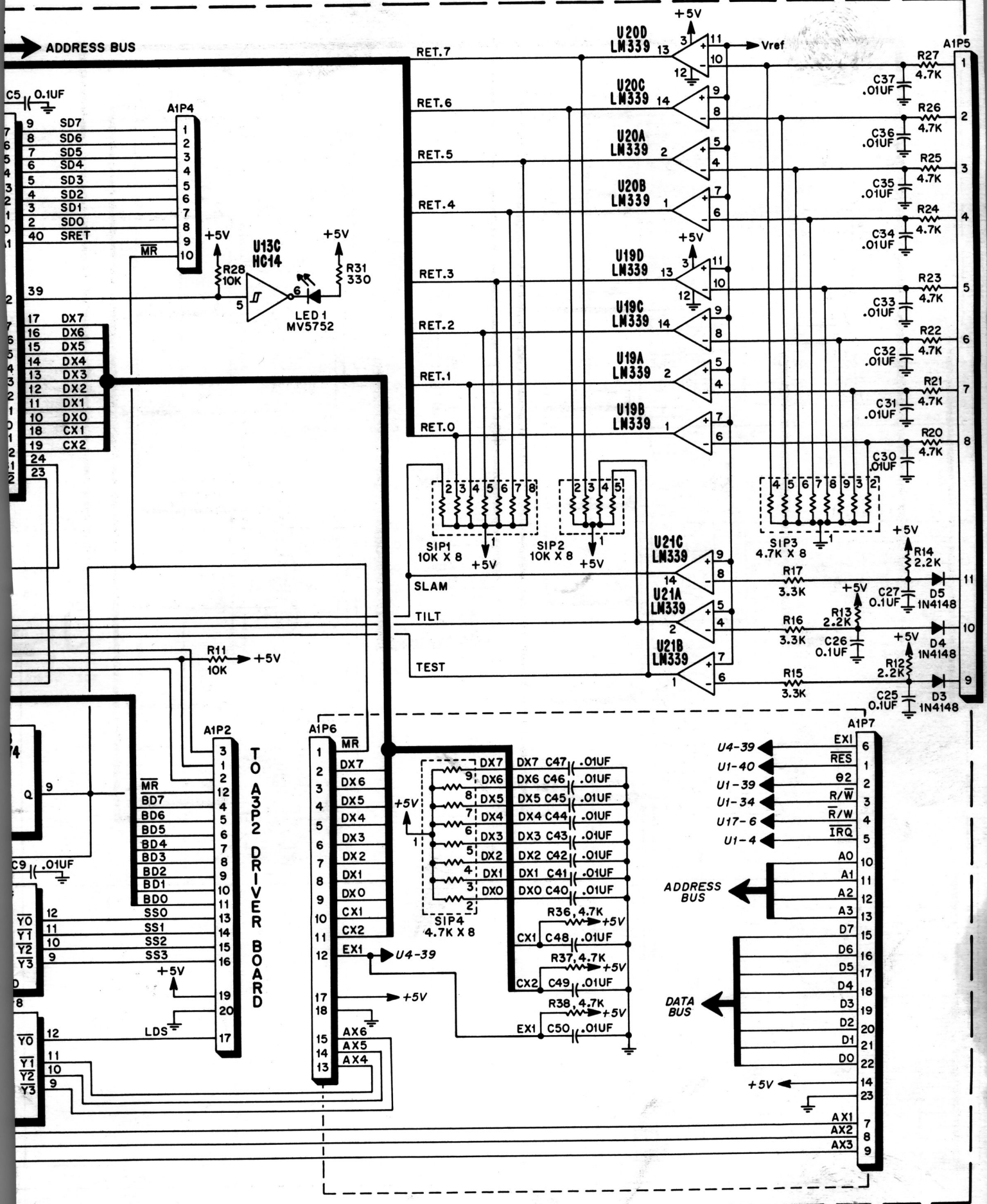
ADDRESS BUS
C5 0.1UF
A1P4
SD7
SD6
SD5
SD4
SD3
SD2
SD1
SDO
SRET
MR
+5V
U13C HC14
R28 10K
R31 330
LED 1 MV5752
DX7
DX6
DX5
DX4
DX3
DX2
DX1
DX0
CX1
CX2
RET.7
RET.6
RET.5
RET.4
RET.3
RET.2
RET.1
RET.0
U20D LM339
U20C LM339
U20A LM339
U20B LM339
U19D LM339
U19C LM339
U19A LM339
U19B LM339
Vref
A1P5
R27 4.7K
R26 4.7K
R25 4.7K
R24 4.7K
R23 4.7K
R22 4.7K
R21 4.7K
R20 4.7K
C37 .01UF
C36 .01UF
C35 .01UF
C34 .01UF
C33 .01UF
C32 .01UF
C31 .01UF
C30 .01UF
SIP1 10K X 8
SIP2 10K X 8
SIP3 4.7K X 8
SLAM
TILT
TEST
U21C LM339
U21A LM339
U21B LM339
R17 3.3K
R16 3.3K
R15 3.3K
R14 2.2K
R13 2.2K
R12 2.2K
C27 0.1UF
C26 0.1UF
C25 0.1UF
D5 1N4148
D4 1N4148
D3 1N4148
R11 10K
A1P2
A1P6
A1P7
TO A3P2 DRIVER BOARD
BD7
BD6
BD5
BD4
BD3
BD2
BD1
BDO
SSO
SS1
SS2
SS3
LDS
AX6
AX5
AX4
EX1
U4-39
SIP4 4.7K X 8
R36 4.7K
R37 4.7K
R38 4.7K
C47 .01UF
C46 .01UF
C45 .01UF
C44 .01UF
C43 .01UF
C42 .01UF
C41 .01UF
C40 .01UF
C48 .01UF
C49 .01UF
C50 .01UF
U4-39
U1-40
U1-39
U1-34
U17-6
U1-4
EXI
RES
Θ2
R/W
R/W
IRQ
ADDRESS BUS
DATA BUS
AO
A1
A2
A3
D7
D6
D5
D4
D3
D2
D1
DO
AX1
AX2
AX3

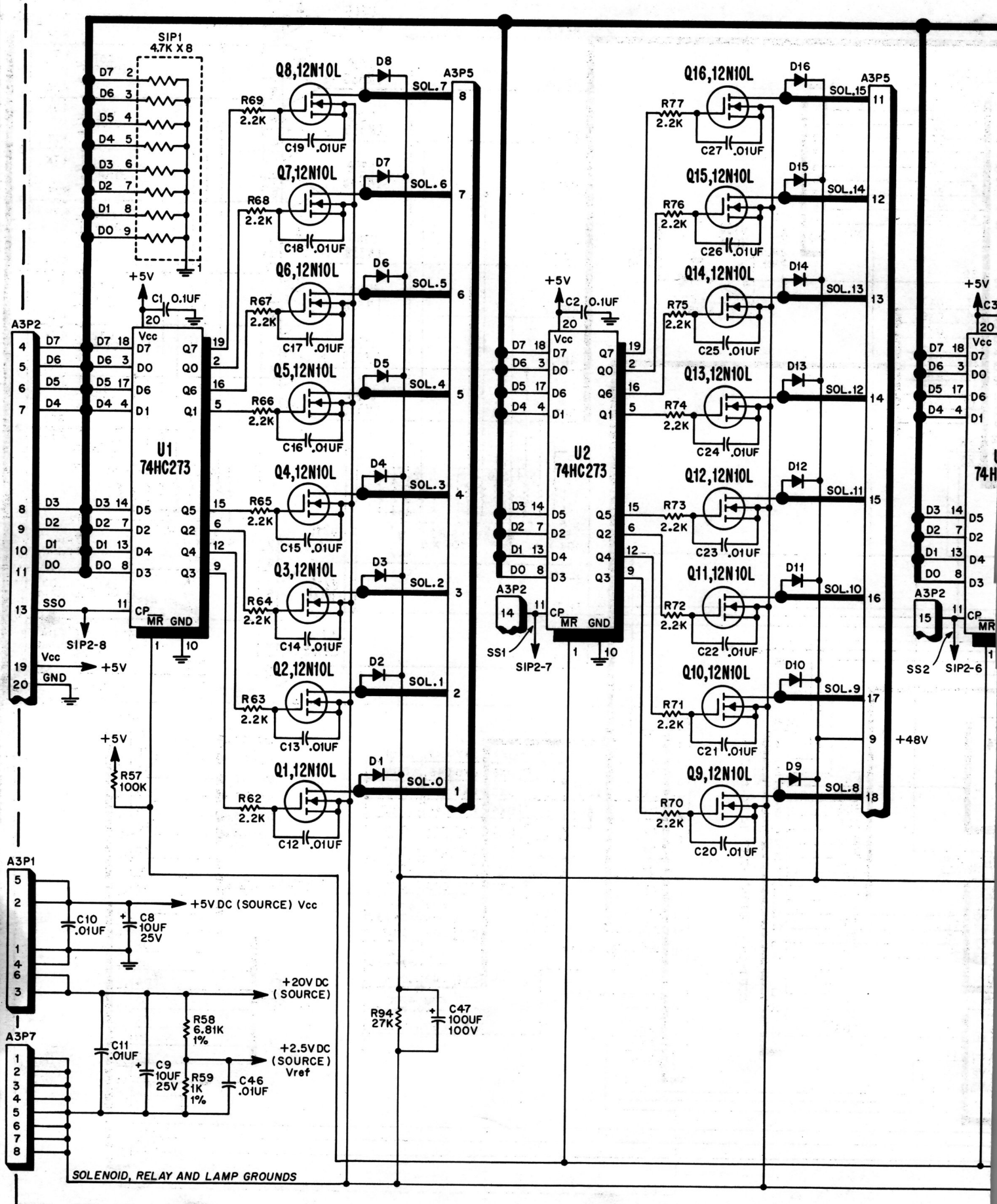
SIP1
4.7K X 8
A3P2
A3P5
U1
74HC273
U2
74HC273
Q8,12N10L
Q7,12N10L
Q6,12N10L
Q5,12N10L
Q4,12N10L
Q3,12N10L
Q2,12N10L
Q1,12N10L
Q16,12N10L
Q15,12N10L
Q14,12N10L
Q13,12N10L
Q12,12N10L
Q11,12N10L
Q10,12N10L
Q9,12N10L
SOL.7
SOL.6
SOL.5
SOL.4
SOL.3
SOL.2
SOL.1
SOL.0
SOL.15
SOL.14
SOL.13
SOL.12
SOL.11
SOL.10
SOL.9
SOL.8
+5V
+48V
SIP2-8
SIP2-7
SIP2-6
SS1
SS2
A3P1
A3P7
+5V DC (SOURCE) Vcc
+20V DC (SOURCE)
+2.5V DC (SOURCE) Vref
SOLENOID, RELAY AND LAMP GROUNDS

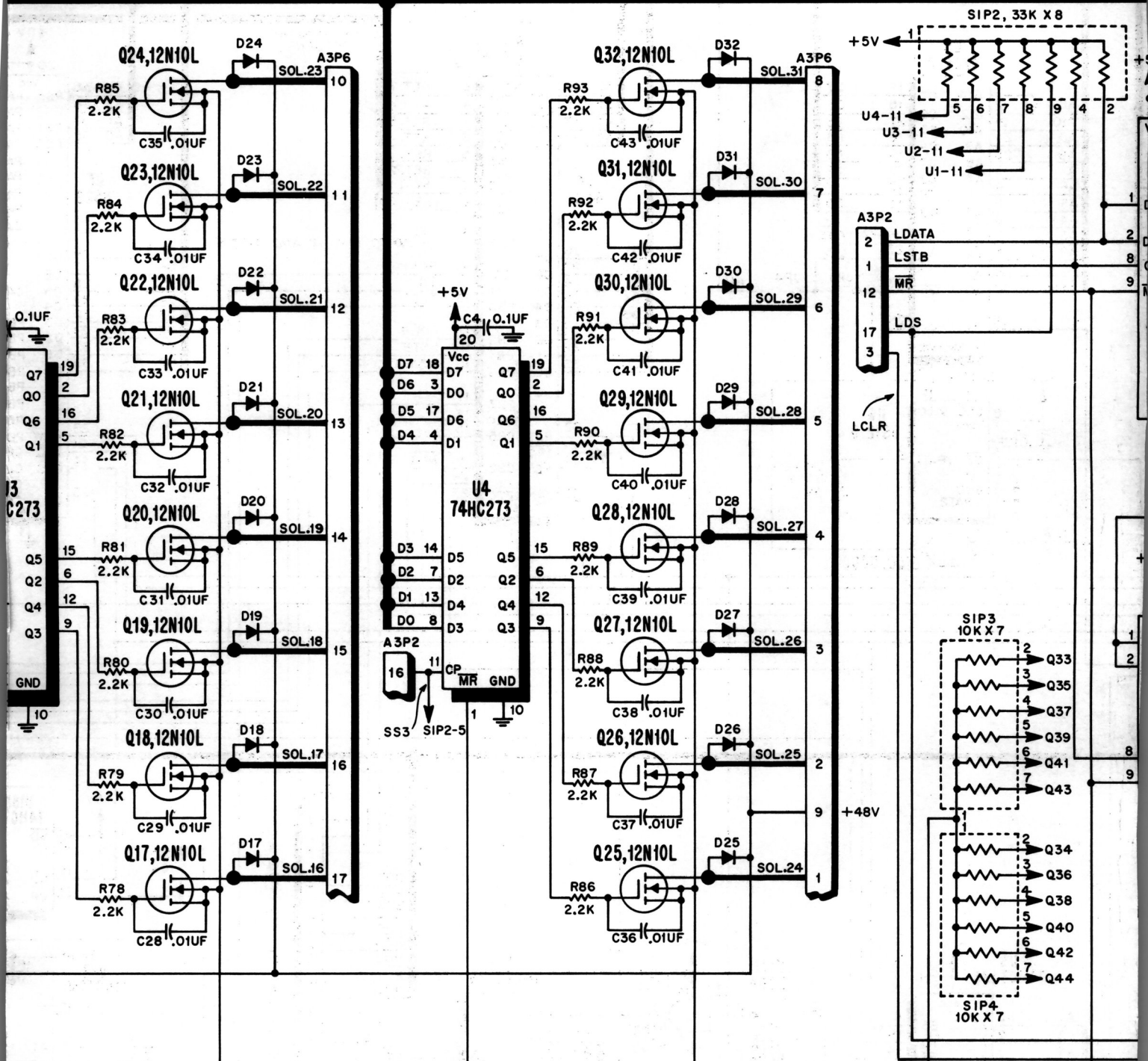

NOTE:
DIODES D1 THRU D32 INCLUSIVE ARE SHOWN BUT NOT USED.

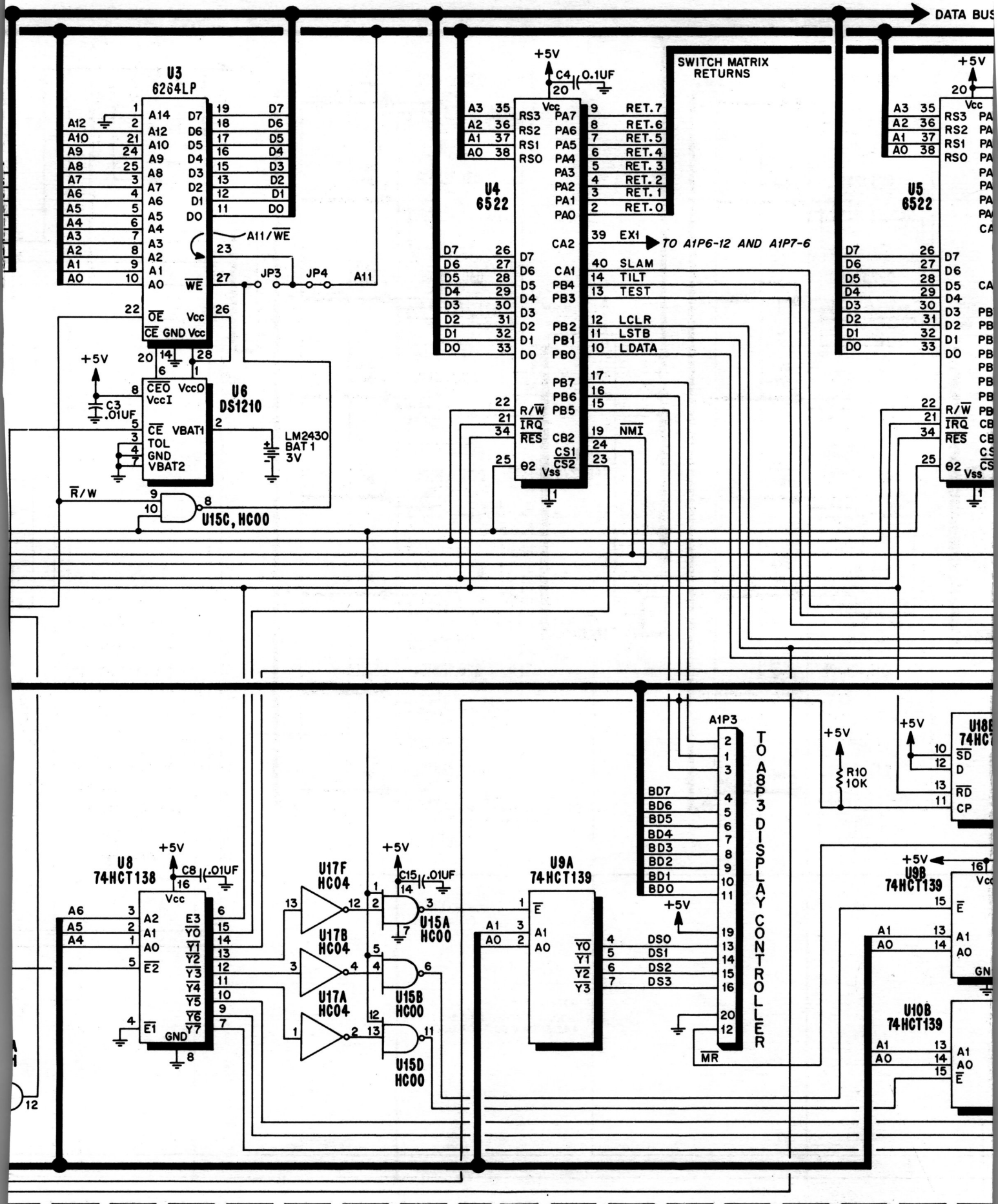
DATA BUS
U3
6264LP
A12 A14 D7
A10 A12 D6
A9 A10 D5
A8 A9 D4
A7 A8 D3
A6 A7 D2
A5 A6 D1
A4 A5 DO
A3 A4
A2 A3
A1 A2
AO A1
A11/WE
JP3 JP4 A11
OE Vcc
CE GND Vcc
+5V
C3 .01UF
U6
DS1210
CEO VccO
VccI
CE VBAT1
TOL
GND
VBAT2
LM2430
BAT 1
3V
R/W
U15C, HC00
+5V
C4 0.1UF
SWITCH MATRIX
RETURNS
U4
6522
RS3 PA7 RET.7
RS2 PA6 RET.6
RS1 PA5 RET.5
RSO PA4 RET.4
PA3 RET.3
PA2 RET.2
PA1 RET.1
PAO RET.0
CA2 EX1
TO A1P6-12 AND A1P7-6
CA1 SLAM
PB4 TILT
PB3 TEST
PB2 LCLR
PB1 LSTB
PBO LDATA
PB7
PB6
R/W PB5
IRQ
RES CB2 NMI
CS1
02 CS2 Vss
U5
6522
+5V
A1P3
TO A8P3 DISPLAY CONTROLLER
BD7
BD6
BD5
BD4
BD3
BD2
BD1
BDO
DS0
DS1
DS2
DS3
MR
R10
10K
U8
74HCT138
C8 .01UF
A6 A5 A4
A2 A1 AO E2 E1
E3 Y0 Y1 Y2 Y3 Y4 Y5 Y6 Y7
GND
U17F
HC04
U17B
HC04
U17A
HC04
C15 .01UF
U15A
HC00
U15B
HC00
U15D
HC00
U9A
74HCT139
E
A1 AO
Y0 Y1 Y2 Y3
U9B
74HCT139
U10B
74HCT139
U18B
74HCT
SD
D
RD
CP
GN

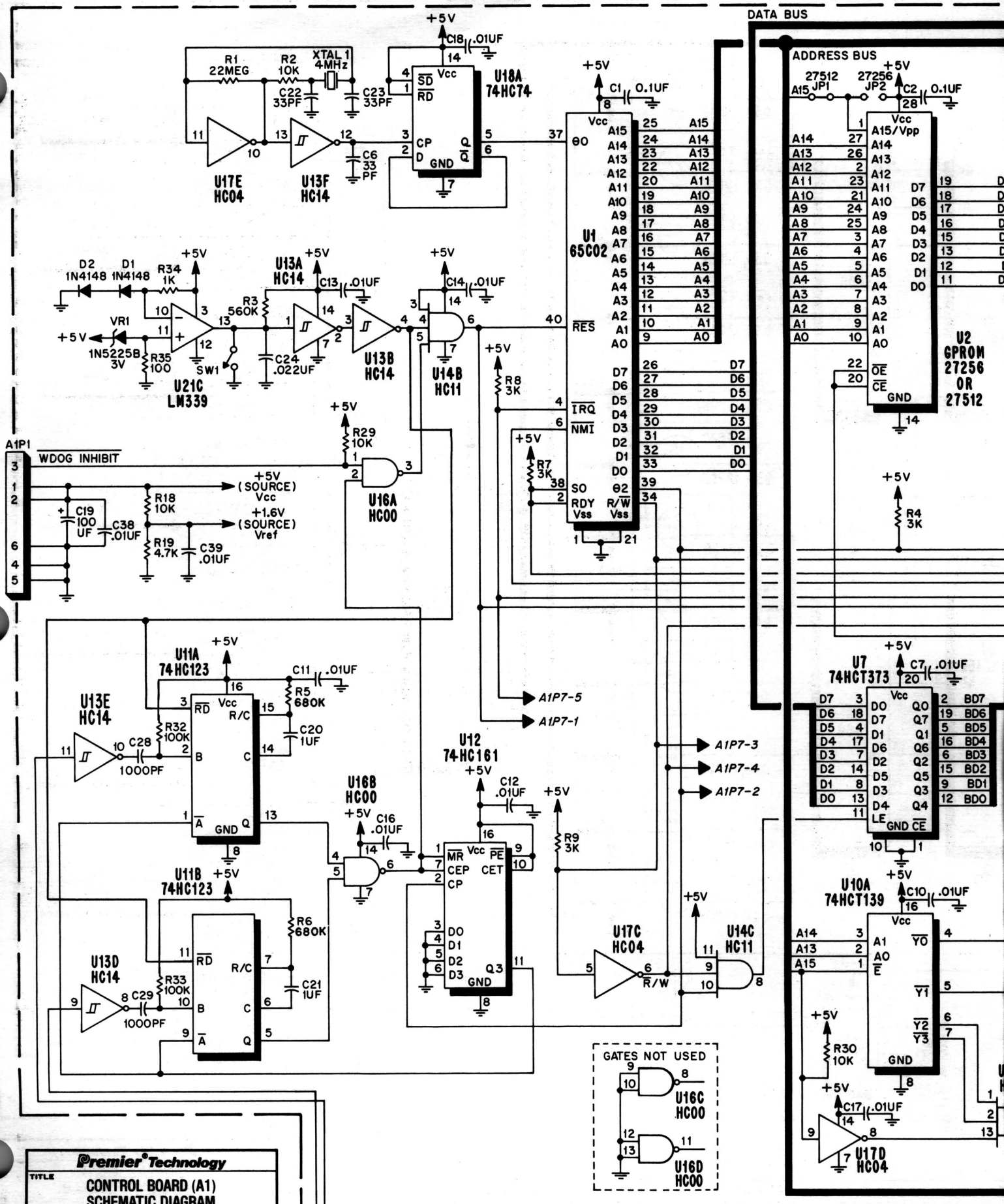

Premier Technology			
TITLE: CONTROL BOARD (A1) SCHEMATIC DIAGRAM			
DRAWN	APPROVED	DATE	E-27033
	RHM	10-12-89	

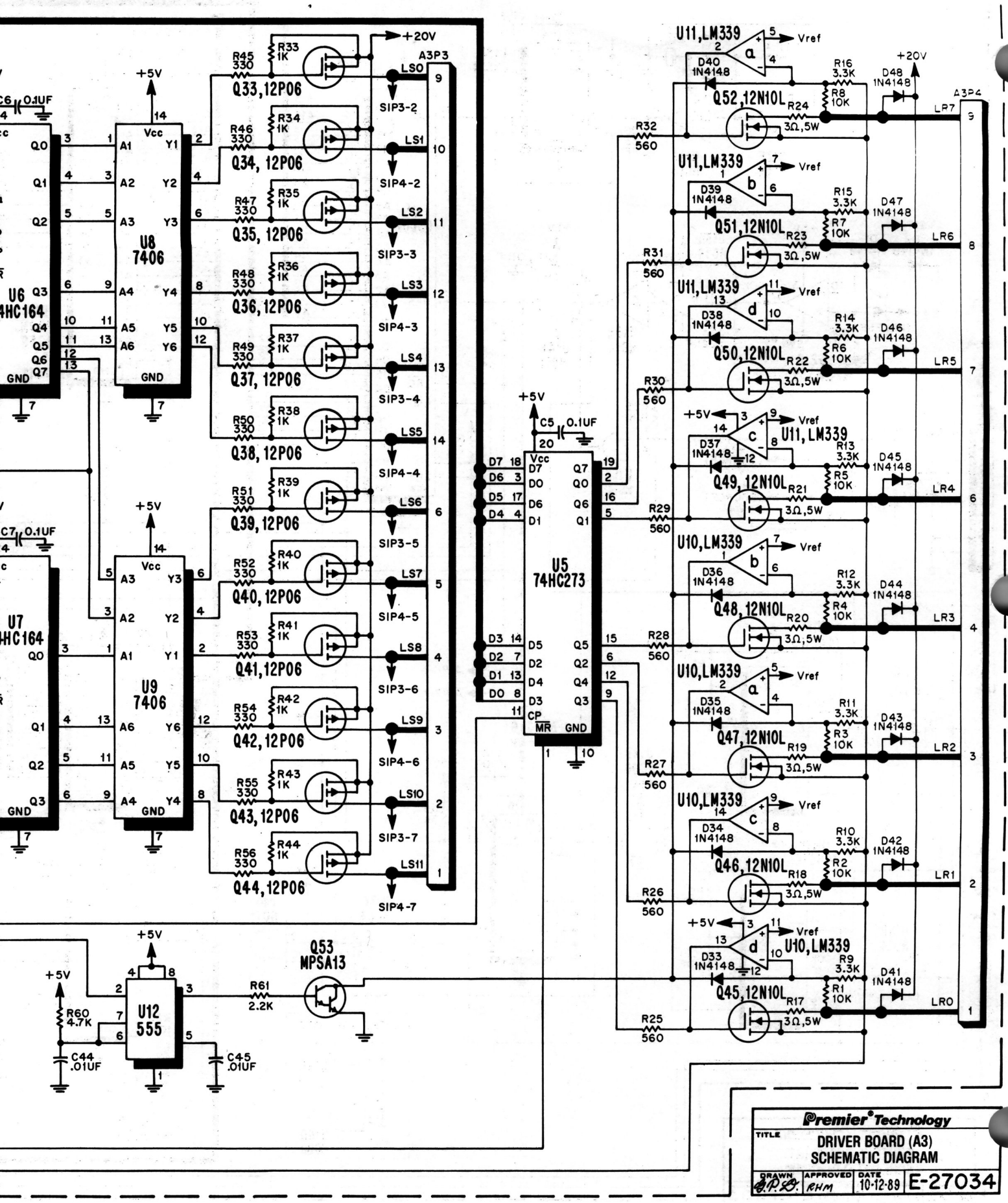

Premier Technology			
TITLE: DRIVER BOARD (A3) SCHEMATIC DIAGRAM			
DRAWN: G.P.S.	APPROVED: RHM	DATE: 10-12-89	E-27034

ATIC DIAGRAMS, PARTS LISTS

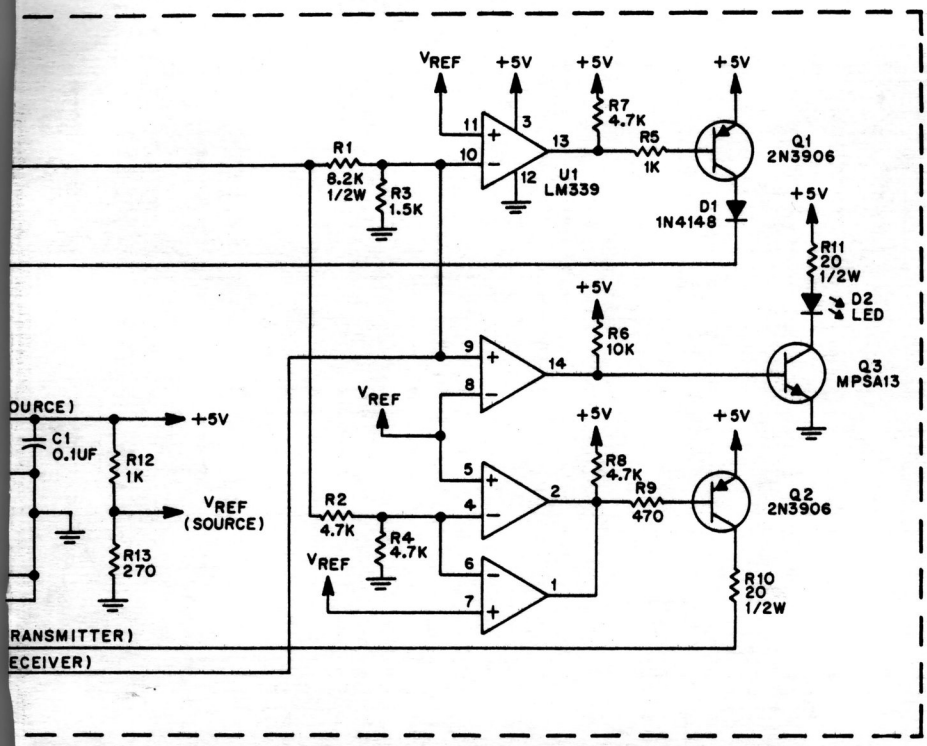

PTICAL INTERFACE BOARD SCHEMATIC DIAGRAM

OPTICAL INTERFACE BOARD (A25) COMPONENT LOCATION

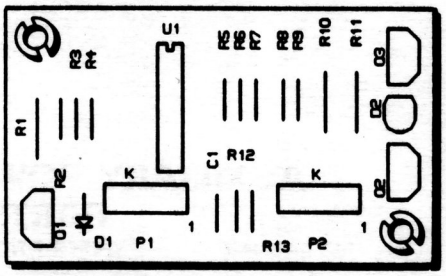

HOTOTRANSISTOR EIVER BOARD NENT LOCATION

HOTOTRANSISTOR EIVER BOARD PARTS LIST

ION	PART NUMBER
totransistor	MA-1331
er Assembly	
Phototransistor	XO-993

CE
OCATION
RAMP (UPPER)
RAMP (LOWER)

OPTICAL INTERFACE BOARD (A25) PARTS LIST

REFERENCE	DESCRIPTION	PART NUMBER
	Optical Interface Board Assembly	MA-1558
AP1,AP2	5 Pin Header	XO-1002
C1	Capacitor, 0.1UF, +80%-20%, 50V	XO-230
D1	Diode, 1N4148	XO-261
D2	Diode, MV5752 (LED, Red)	XO-270
Q1,Q2	Transistor, PNP, 2N3906	XO-588
Q3	Transistor, NPN, MPSA13	XO-304
R1	Resistor, 8.2K Ohm, 5%, 1/2W	XO-1022
R2,R4,R7,R8	Resistor, 4.7K Ohm, 5%, 1/4W	XO-7
R3	Resistor, 1.5K Ohm, 5%, 1/4W	XO-20
R5,R12	Resistor, 1K Ohm, 5%, 1/4W	XO-5
R6	Resistor, 10K Ohm, 5%, 1/4W	XO-18
R9	Resistor, 470 Ohm, 5%, 1/4W	XO-35
R10,R11	Resistor, 20 Ohm, 5%, 1/2W	XO-65
R13	Resistor, 270 Ohm, 5%, 1/4W	XO-68
U1	IC, Quad Comparators, LM339	XO-583
	Support, SRS-8-6N, (2)	23984

VI. WIRING AND SCHEMATIC DIAGRAMS, PARTS LISTS

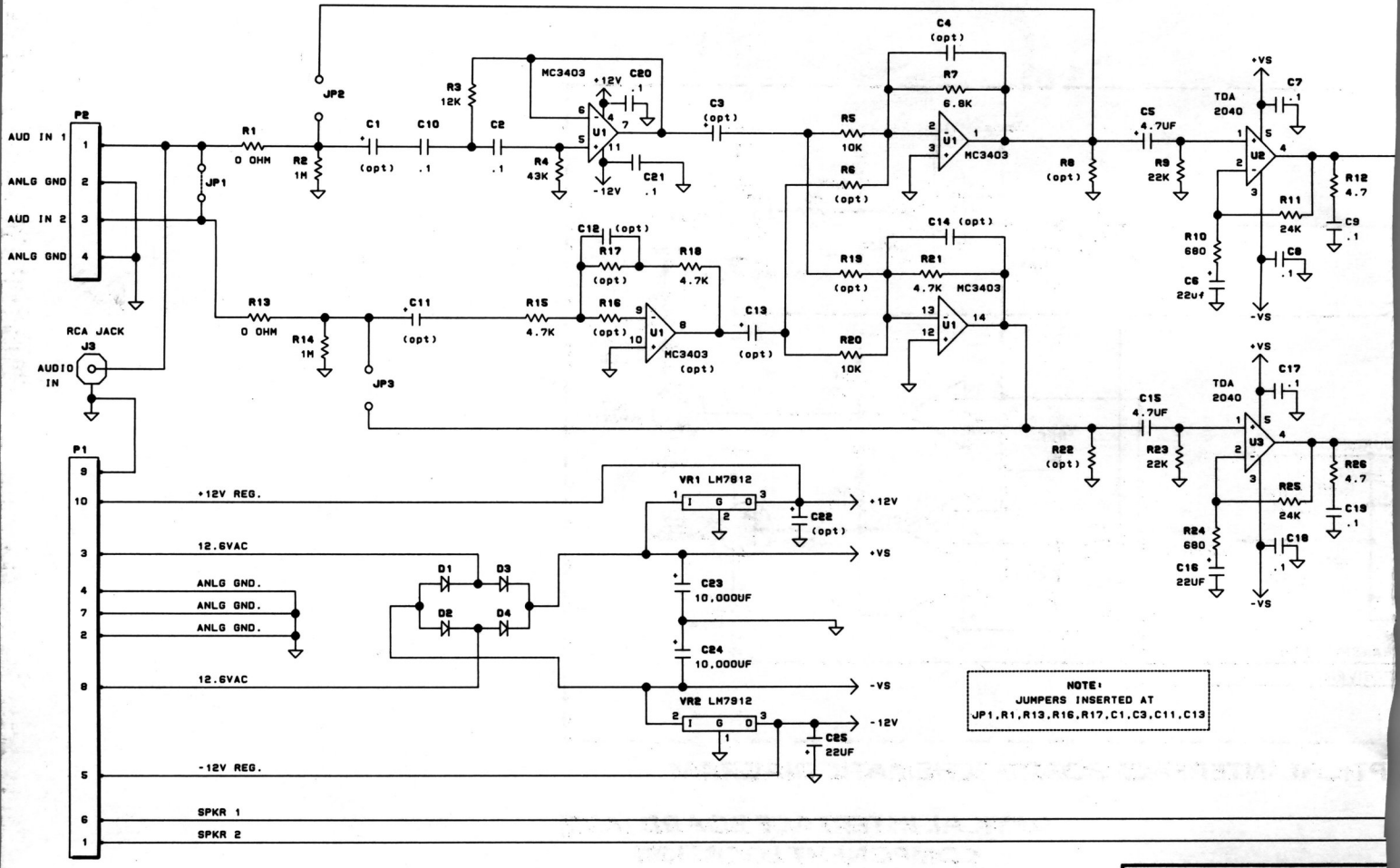

Premier Technolog			
TITLE: AUXILIARY POWER SUPPLY SCHEMATIC DIAGRAM			
DRAWN	APPROVED	DATE	
J.B.	RHM	4-8-92	MA

AUXILIARY POWER SUPPLY (A5) COMPONENT LOCATION

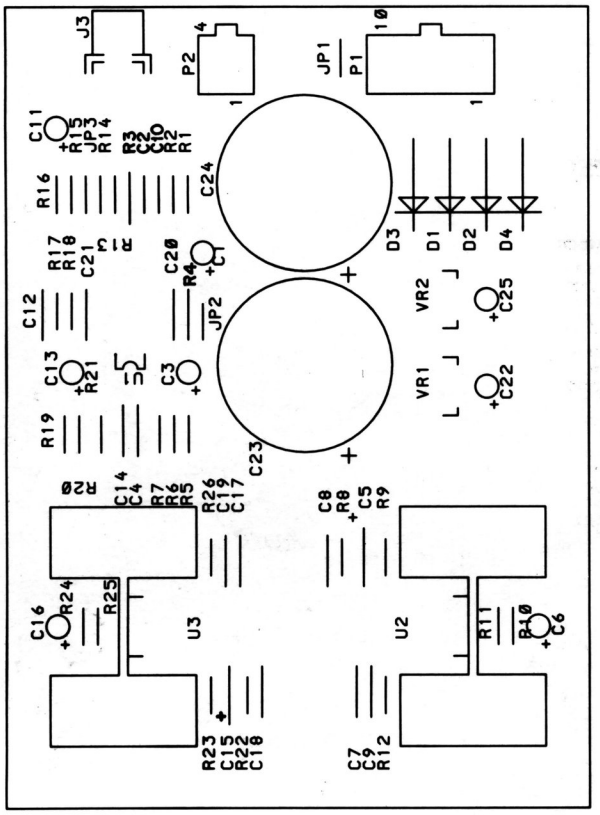

AUXILIARY POWER SUPPLY (A5) PARTS LIST

REFERENCE	DESCRIPTION	PART NUMBER
A5	AUXILLIARY POWER SUPPLY	MA-1772
C1,C3,C11, C13	CAPACITOR, 4.7UF, 10%, 10V	XO-469A
C2,C10	CAPACITOR, 0.1UF, 10%, 100V	XO-784
C5,C15	CAPACITOR, 4.7UF, 10%, 10V	XO-226
C6,C16,C25	CAPACITOR, 22UF, +80%-20%, 16V	XO-293
C7,C8,C9, C17,C18,C19, C20,C21	CAPACITOR, 0.1UF, +80%-20%, 50V	XO-230
C23,C24	CAPACITOR, 10,000UF, +80%-20%, 25V	XO-830
D1-D4	DIODE, 1N5401	XO-263
R1,R13,JP1, R16,R17	RESISTOR, 0 OHM, JUMPER	XO-469
R2,R14	RESISTOR, 1 MEGOHM, 5%, 1/4W	XO-604
R3	RESISTOR, 12K OHM, 5%, 1/4W	XO-9
R4	RESISTOR, 43K OHM, 5%, 1/4W	XO-15
R5,R20	RESISTOR, 10K OHM, 5%, 1/4W	XO-18
R7	RESISTOR, 6.8K OHM, 5%, 1/4W	XO-8
R8	RESISTOR, 2.2K OHM, 5%, 1/4W	XO-27
R9,R23	RESISTOR, 22K OHM, 5%, 1/4W	XO-42
R10,R24	RESISTOR, 680 OHM, 5%, 1/4W	XO-139
R11,R25	RESISTOR, 24K OHM, 5%, 1/4W	XO-10
R12,R26	RESISTOR, 4.7 OHM, 5%, 1/4W	XO-800
R15,R18,R21	RESISTOR, 4.7K OHM, 5%, 1/4W	XO-7
U1	IC, QUAD AMP, MC3403P	XO-953
U2,U3	IC, AUDIO AMPLIFIER, TDA2040	XO-1038
VR1	REGULATOR, +12V, LM7812CT	XO-1039
VR2	REGULATOR, -12V, LM7912CT	XO-130
J3	CONNECTOR, RCA	XO-1035
P1	HEADER, 10 POSITION	XO-912
	HEAT SINK	XO-1040

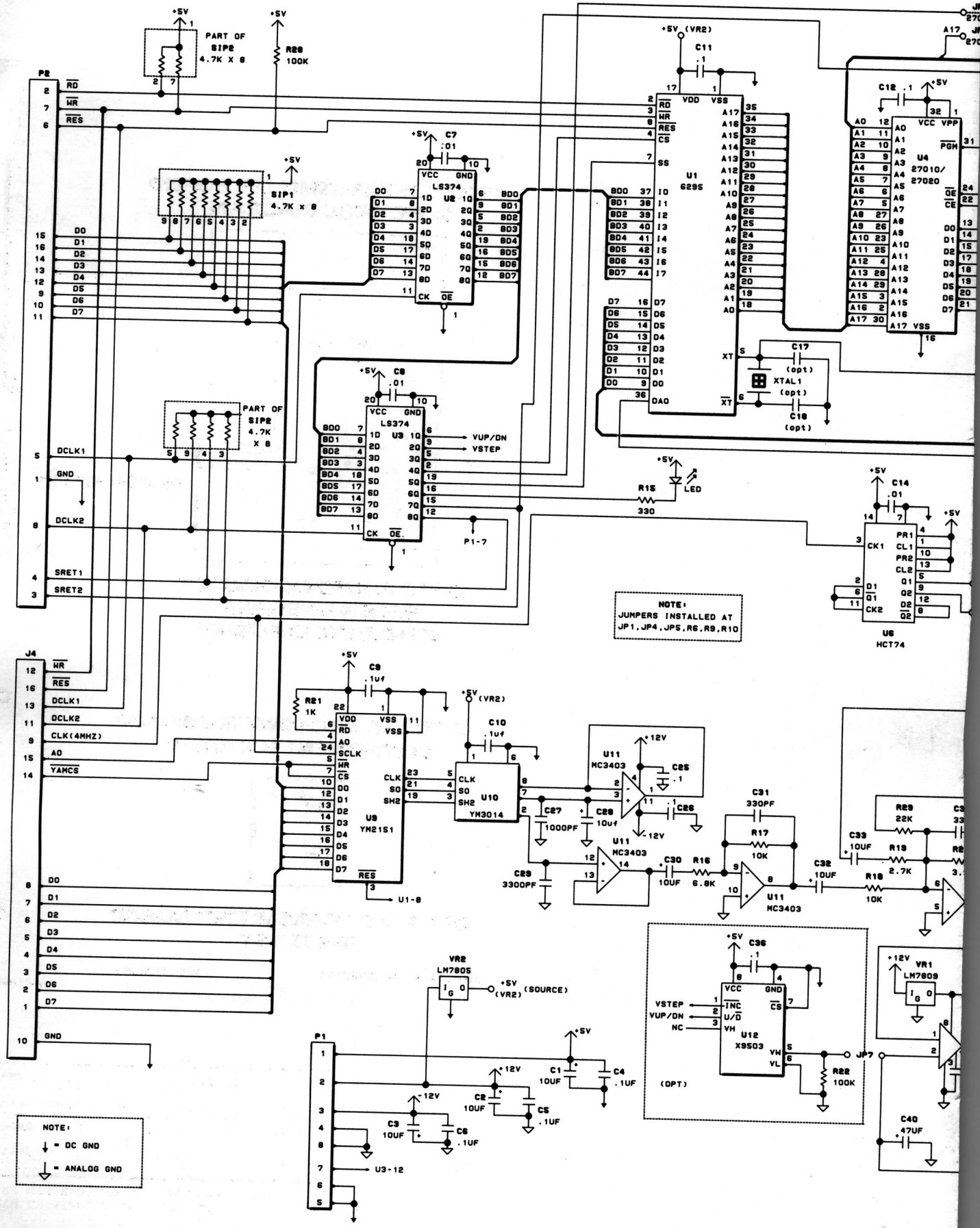

Premier Technology			
TITLE: AUXILIARY SOUND BOARD (A20) SCHEMATIC DIAGRAM			
DRAWN	APPROVED	DATE	
J.B.	RHM	4-8-92	MA-1770

OPTO LED TRANSMITTER BOARD SCHEMATIC DIAGRAM

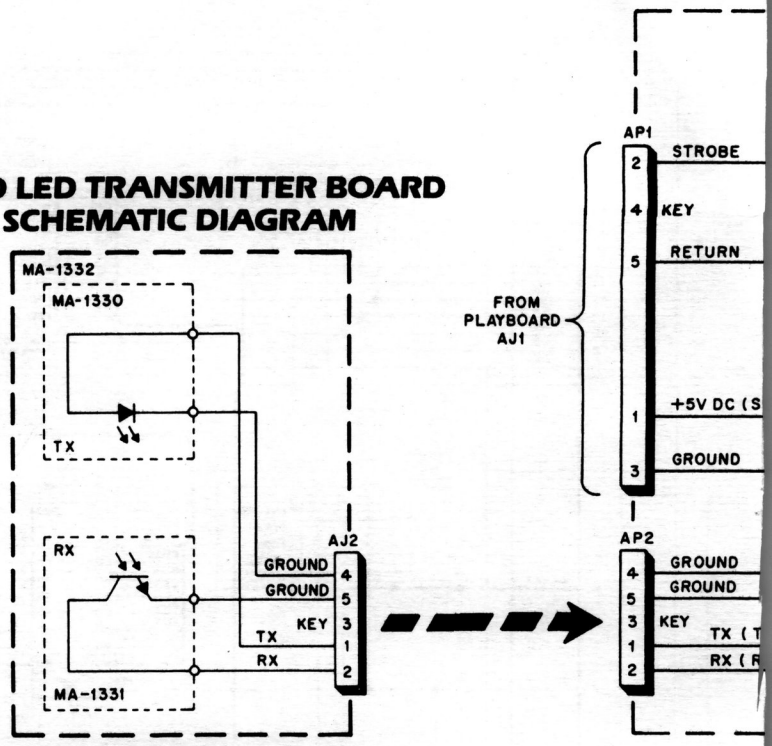

OPTO PHOTOTRANSISTOR RECEIVER BOARD SCHEMATIC DIAGRAM

OPTO LED TRANSMITTER BOARD COMPONENT LOCATION

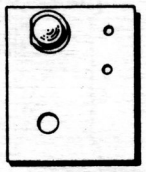

OPTO LED TRANSMITTER BOARD PARTS LIST

REFERENCE	DESCRIPTION	PART NUMBER
	Opto LED Transmitter Assembly	MA-1330
TX	Plastic Transmitter LED	XO-994

BRACKET AND OPTIC BOARD ASSEMBLIES REFERE			
ASSEMBLY	CONNECTOR NO.	PLATE AND SUPPORT	
30893	A9P16	29662	RIGI
30893	A9P15	29662	RIGI

NOTE: BRACKET AND OPTIC BOARD ASSEMBLY DOES NOT INCLUDE WIRING HARNESS.

VI. WIRING AND SCHEMATIC DIAGRAMS, PARTS LISTS

DRIVER BOARD (A3) COMPONENT LOCATION

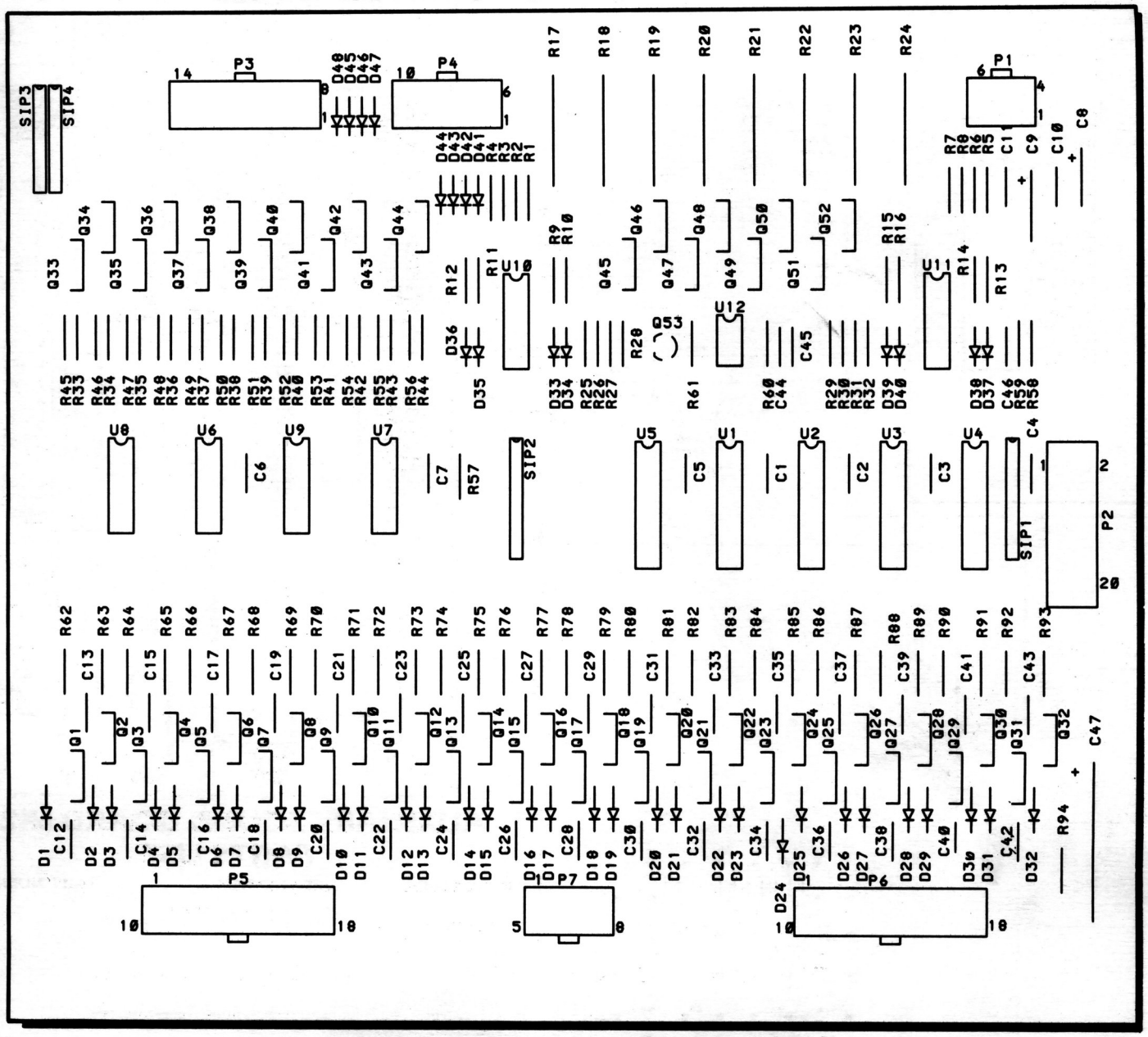

DRIVER BOARD (A3) PARTS LIST

REFERENCE	DESCRIPTION	PART NUMBER
	Driver Board Assembly (A3)	MA-1358
C1-C7	Capacitor, 0.1 UF, +80% -20%, 50V	XO-230
C8	Capacitor, 10UF, 20%, 25V	XO-127
C9	Capacitor, 10UF, +80% -20%, 25V	XO-225
C10,C11	Capacitor, .01UF, +80% -20%, 50V	XO-229
C45,C46		
C12-C44	Capacitor, .01UF, 10%, 50V	XO-696
C47	Capacitor, 100UF, 20%, 100V	XO-958
D33-D48	Diode, 1N4148	XO-261
Q1-Q32, Q45-Q52,Q54	Transistor, RFP12N10L, OR IRL530, N-Channel MOSFET	XO-947
Q33-Q44	Transistor, RFP12P06, IRF9531 OR MT2955 P-Channel MOSFET	XO-948
Q53	Transistor, MPSA13, Darlington	XO-304
R1-R8	Resistor, 10K Ohm, 5%, 1/4W	XO-18
R9-R16	Resistor, 3.3K Ohm, 5%, 1/4W	XO-38
R17-R24	Resistor, 3 Ohm, 5%, 5W	XO-942
R25-R32	Resistor, 560 Ohm, 5%, 1/4W	XO-36
R33-R44	Resistor, 1K Ohm, 5%, 1/4W	XO-5
R45-R56	Resistor, 330 Ohm, 5%, 1/4W	XO-34
R57	Resistor, 100K Ohm, 5%, 1/4W	XO-45
R58	Resistor, 6.81K Ohm, 1%, 1/4W	XO-943
R59	Resistor, 1K Ohm, 1%, 1/4W	XO-944
R60	Resistor, 4.7K Ohm, 5%, 1/4W	XO-7
R61-R93	Resistor, 2.2K Ohm, 5%, 1/4W	XO-27
R94	Resistor, 27K Ohm, 5%, 1/4W	XO-11
SIP1	Resistor Pack, 4.7K Ohm X 8,5%, 1/4W	XO-161
SIP2	Resistor Pack, 33K Ohm X 8,5%, 1/4W	XO-945
SIP3	Resistor Pack, 10K Ohm X 7,5%, 1/4W	XO-926
SIP4		
U1-U5	IC, Octal "D" Flip-Flops, 74HC273	XO-949
U6-U7	IC, Shift Register, 74HC164	XO-950
U8-U9	IC, Buffer, 7406	XO-85
U10-U11	IC, Quad Comparator, LM339	XO-583
U12	IC, Timer, NE555	XO-631
A3P1	Header, 6 Position	XO-910
A3P2	Header, 20 Position (Ribbon)	XO-940
A3P3	Header, 14 Position	XO-914
A3P4	Header, 10 Position	XO-912
A3P5,	Header, 18 Position	XO-916
A3P6		
A3P7	Header, 8 Position	XO-911

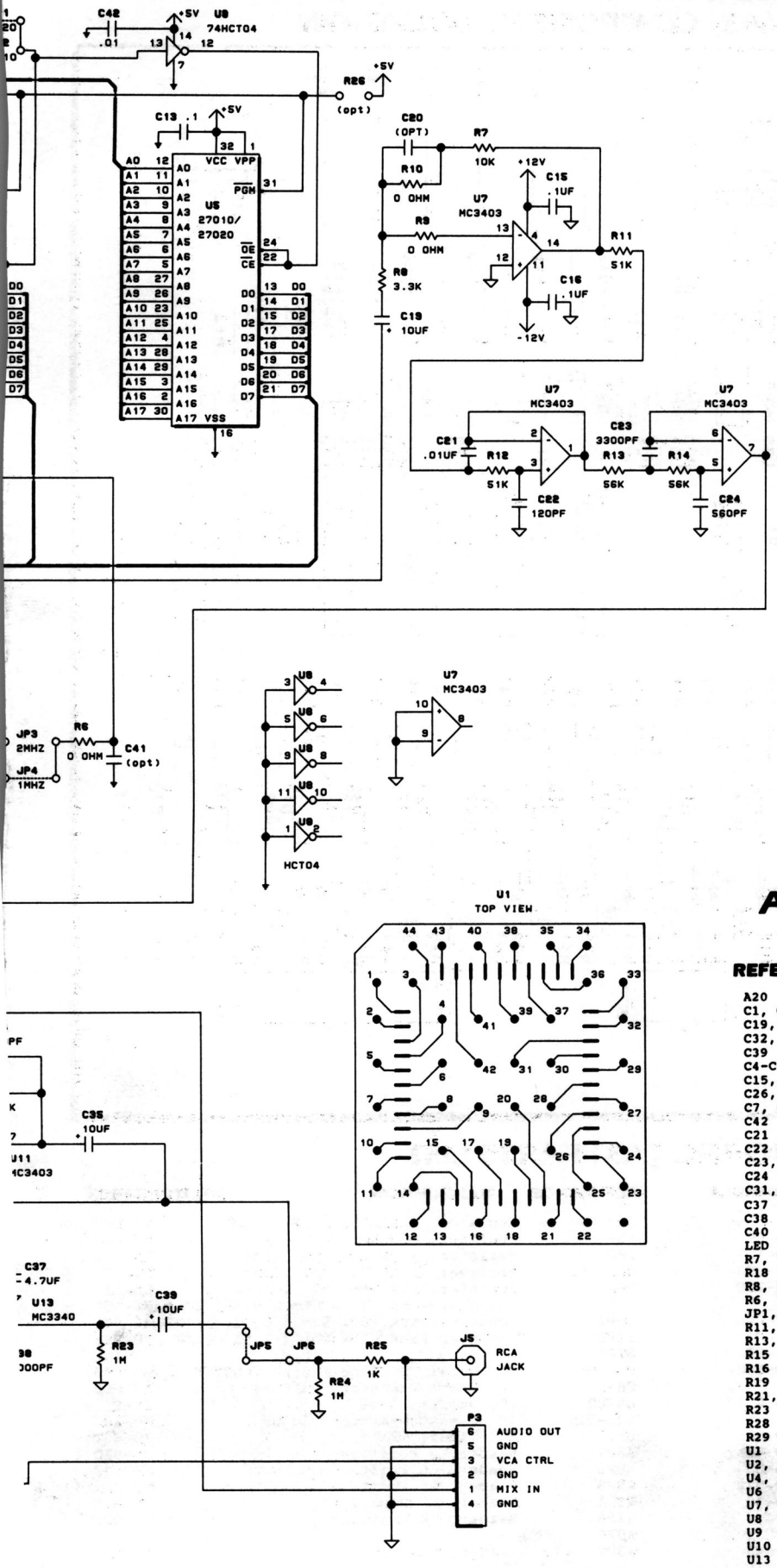

AUXILIARY SOUND BOARD (A20) COMPONENT LOCATION

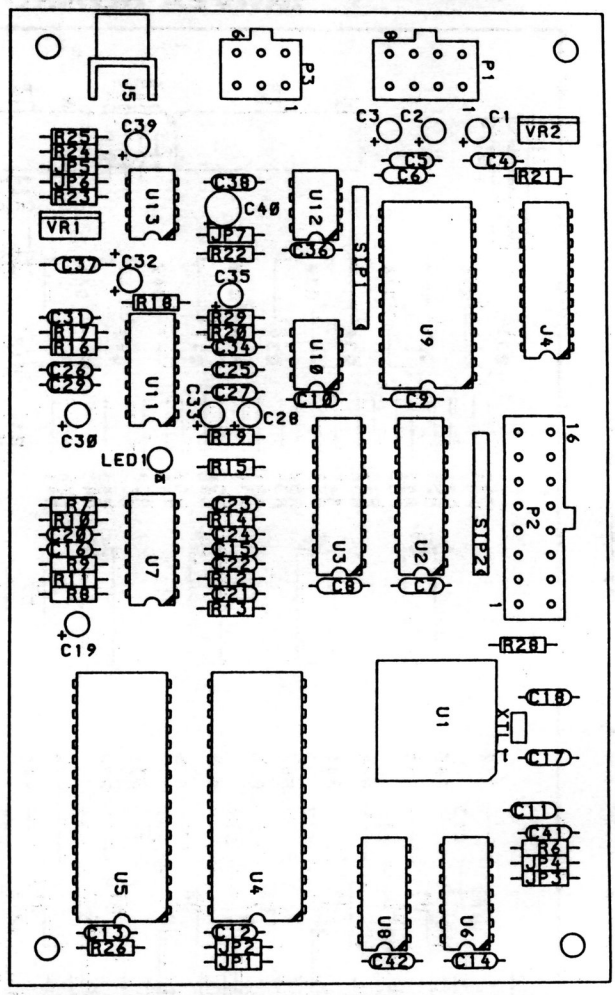

AUXILIARY SOUND BOARD (A20) PARTS LIST

REFERENCE	DESCRIPTION	PART NUMBER
A20	AUXILIARY SOUND BOARD	MA-1770
C1, C2, C3, C19, C28, C30, C32, C33, C35, C39	CAPACITOR, 10UF, +80%-20%, 16V	XO-1030
C4-C6, C9-C13 C15, C16, C25, C26, C36	CAPACITOR, 0.1UF, +80%-20%, 50V	XO-230
C7, C8, C14, C42	CAPACITOR, .01UF, +80%-20%, 50V	XO-229
C21	CAPACITOR, .01UF, 10%, 50V	XO-696
C22	CAPACITOR, 120PF, 10%, 50V	XO-1032
C23, C29	CAPACITOR, 3300PF, 10%, 100V	XO-600
C24	CAPACITOR, 560PF, 10%, 50V	XO-681
C31, C34	CAPACITOR, 330PF, 10%, 50V	XO-1033
C37	CAPACITOR, 4.7UF, 10%, 10V	XO-226
C38	CAPACITOR, 1000PF, 10%, 100V	XO-296
C40	CAPACITOR, 47UF, 10V	XO-227
LED	DIODE, MV5752, RED	XO-270
R7, R17, R18	RESISTOR, 10K OHM, 5%, 1/4W	XO-18
R8, R20	RESISTOR, 3.3K OHM, 5%, 1/4W	XO-38
R6, R9, R10, JP1, JP4, JP5	RESISTOR, 0 OHM, JUMPER	XO-469
R11, R12	RESISTOR, 51K OHM, 5%, 1/4W	XO-44
R13, R14	RESISTOR, 56K UHM, 5%, 1/4W	XO-771
R15	RESISTOR, 330 OHM, 5%, 1/4W	XO-34
R16	RESISTOR, 6.8K OHM, 5%, 1/4W	XO-8
R19	RESISTOR, 2.7K OHM, 5%, 1/4W	XO-6
R21, R25	RESISTOR, 1K OHM, 5%, 1/4W	XO-5
R23	RESISTOR, 1MEGOHM, 5%, 1/4W	XO-604
R28	RESISTOR, 100K OHM, 5%, 1/4W	XO-45
R29	RESISTOR, 22K OHM, 5%, 1/4W	XO-42
U1	IC, MSM6295, SPEECH CHIP	*XO-1023
U2, U3	IC, 74LS374, OCTAL "D" FLIP-FLOP	XO-96
U4, U5	IC, 27C010 (SPECIFIED PER GAME)	
U6	IC, 74HCT74, "D" FLIP-FLOP	XO-889
U7, U11	IC, MC3403P, QUAD AMP	XO-953
U8	IC, 74HCT04, HEX INVERTER	XO-1026
U9	IC, YM2151, SOUND CHIP	XO-882
U10	IC, YM3014, SERIAL DAC	XO-883
U13	IC, MC3340P, VCA, AMPLIFIER	XO-1028
J4	SOCKET, 20 PIN	XO-491
J5	JACK, RCA	XO-1035
P1	HEADER, 8 POSITION	XO-911
P3	HEADER, 6 POSITION	XO-910
U4, U5	SOCKET, 32 PIN	XO-1036
U9	SOCKET, 24 PIN	XO-529
	PCB ASSEMBLY, P/O *XO-1023	27922
VR1	IC, LM7809CT, REGULATOR	XO-1037
VR2	IC, 5V REGULATOR	XO-663

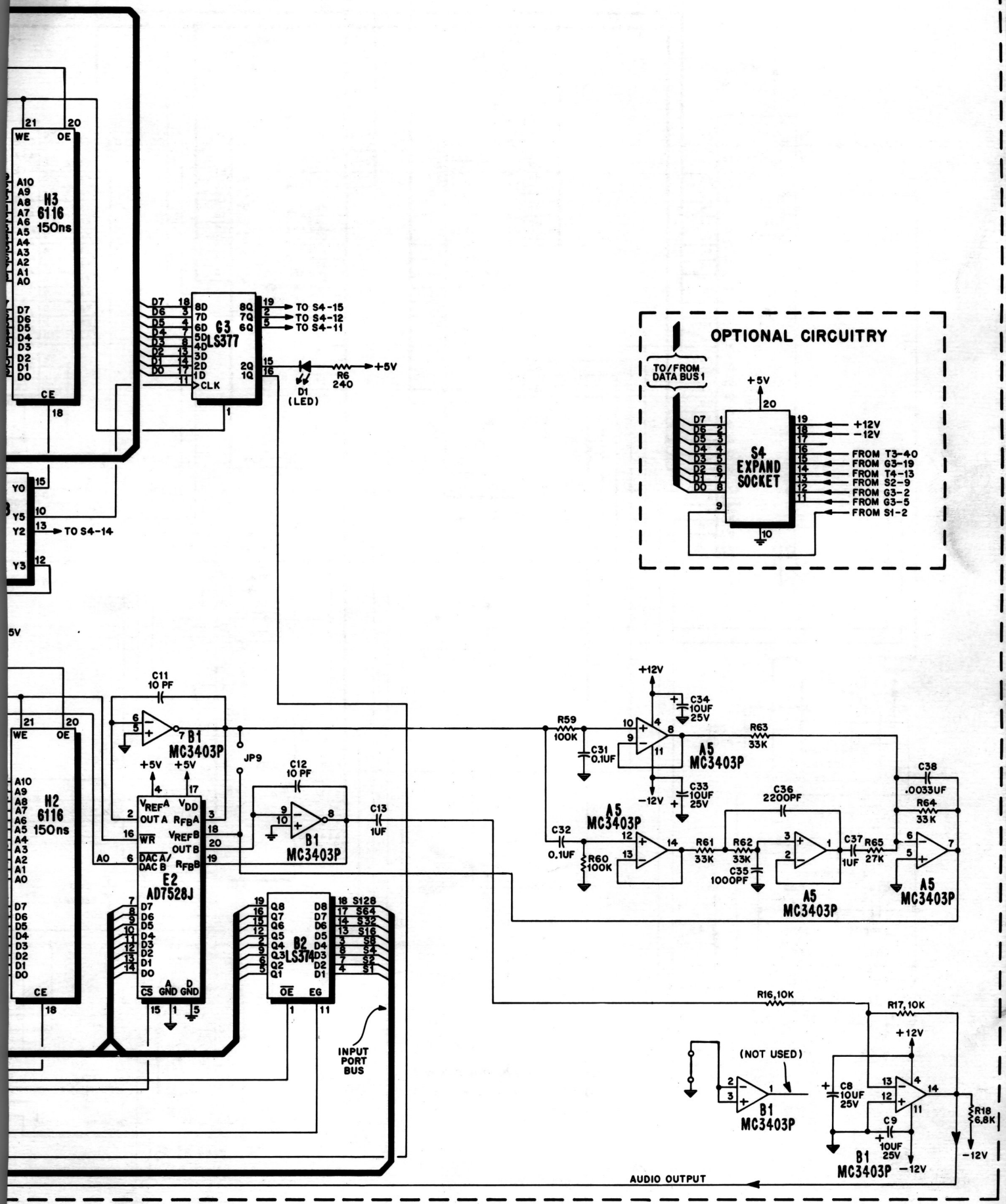
H3 6116 150ns
G3 LS377
TO S4-15
TO S4-12
TO S4-11
R6 240
+5V
D1 (LED)
TO S4-14
OPTIONAL CIRCUITRY
TO/FROM DATA BUS 1
S4 EXPAND SOCKET
+12V
-12V
FROM T3-40
FROM G3-19
FROM T4-13
FROM S2-9
FROM G3-2
FROM G3-5
FROM S1-2
C11 10 PF
B1 MC3403P
JP9
C12 10 PF
C13 1UF
H2 6116 150Ns
E2 AD7528J
B2 LS374
INPUT PORT BUS
R59 100K
C31 0.1UF
C34 10UF 25V
A5 MC3403P
R63 33K
C33 10UF 25V
C36 2200PF
C38 .0033UF
R64 33K
C32 0.1UF
R60 100K
R61 33K
R62 33K
C35 1000PF
C37 1UF
R65 27K
R16,10K
R17,10K
(NOT USED)
C8 10UF 25V
C9 10UF 25V
R18 6.8K
AUDIO OUTPUT

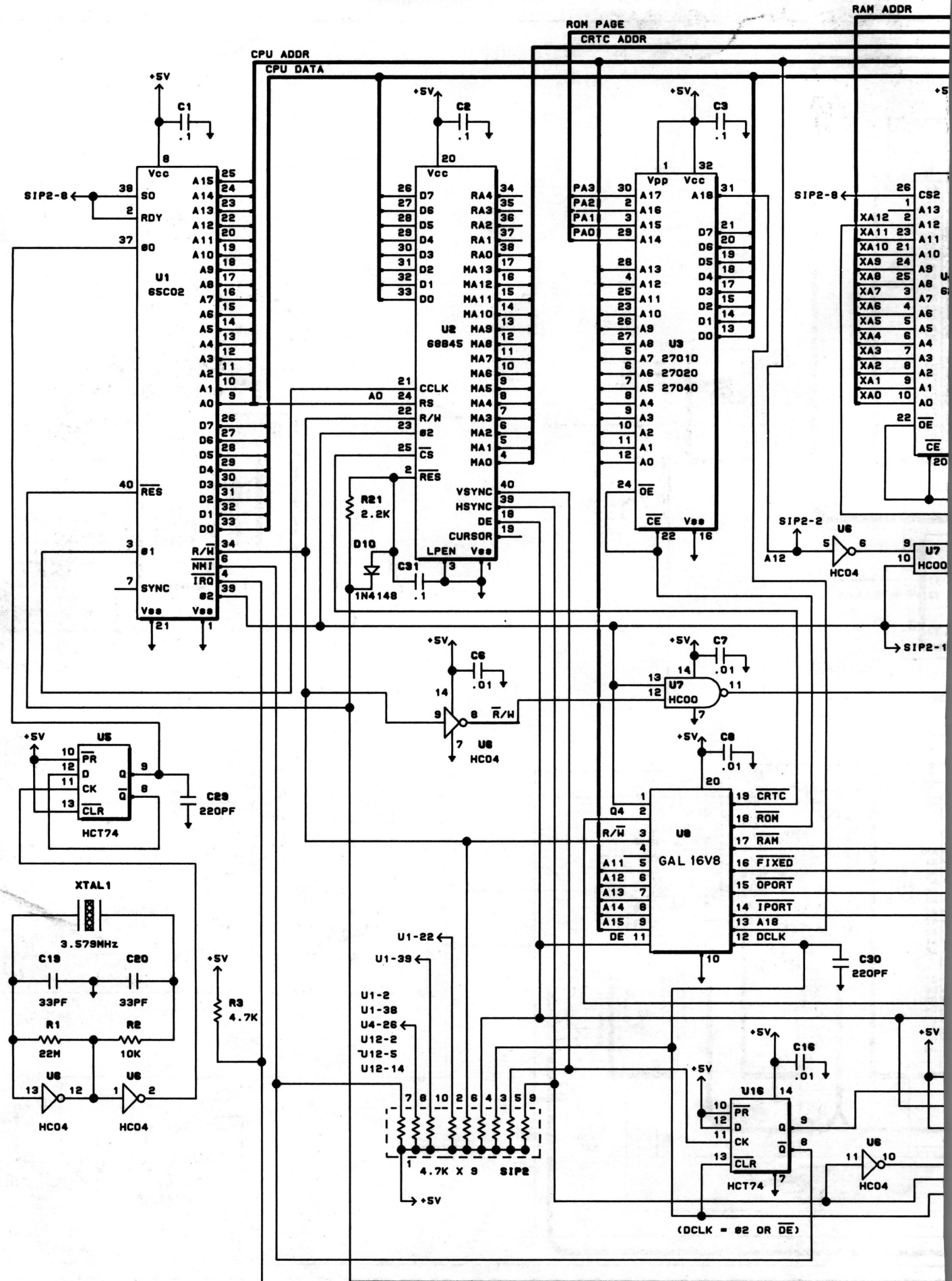
RAM ADDR
ROM PAGE
CRTC ADDR
CPU ADDR
CPU DATA
+5V
C1
.1
U1
65C02
Vcc
SO
RDY
SO
RES
Φ1
SYNC
Φ2
Vss
A15
A14
A13
A12
A11
A10
A9
A8
A7
A6
A5
A4
A3
A2
A1
A0
D7
D6
D5
D4
D3
D2
D1
D0
R/W
NMI
IRQ
SIP2-8
C2
U2
6845
CCLK
RS
R/W
Φ2
CS
RES
VSYNC
HSYNC
DE
CURSOR
LPEN
MA0
MA1
MA2
MA3
MA4
MA5
MA6
MA7
MA8
MA9
MA10
MA11
MA12
MA13
RA0
RA1
RA2
RA3
RA4
R21
2.2K
D10
1N4148
C31
C3
U3
27010
27020
27040
Vpp
Vcc
Vss
OE
CE
PA3
PA2
PA1
PA0
SIP2-2
A12
U6
HC04
U7
HC00
SIP2-1
C6
.01
C7
C8
U5
HCT74
PR
D
CK
CLR
Q
C29
220PF
XTAL1
3.579MHz
C19
C20
33PF
R1
R2
22M
10K
R3
4.7K
U8
GAL 16V8
Q4
R/W
A11
A12
A13
A14
A15
DE
CRTC
ROM
RAM
FIXED
OPORT
IPORT
A18
DCLK
C30
220PF
U1-22
U1-39
U1-2
U1-38
U4-26
U12-2
U12-5
U12-14
4.7K X 9
SIP2
C16
U16
(DCLK = Φ2 OR DE)

VI. WIRING AND SCHEMATIC DIAGRAMS, PARTS LISTS

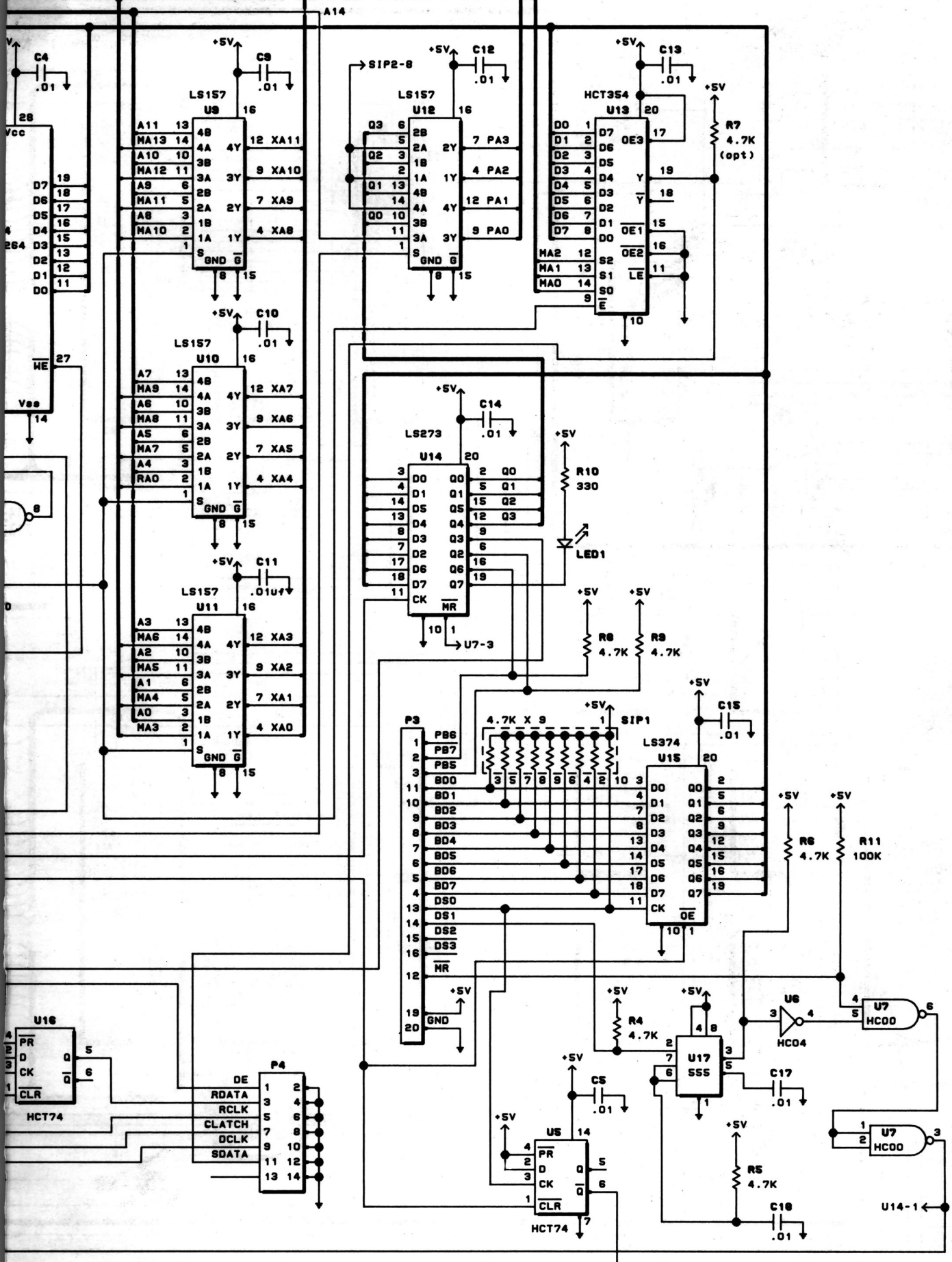

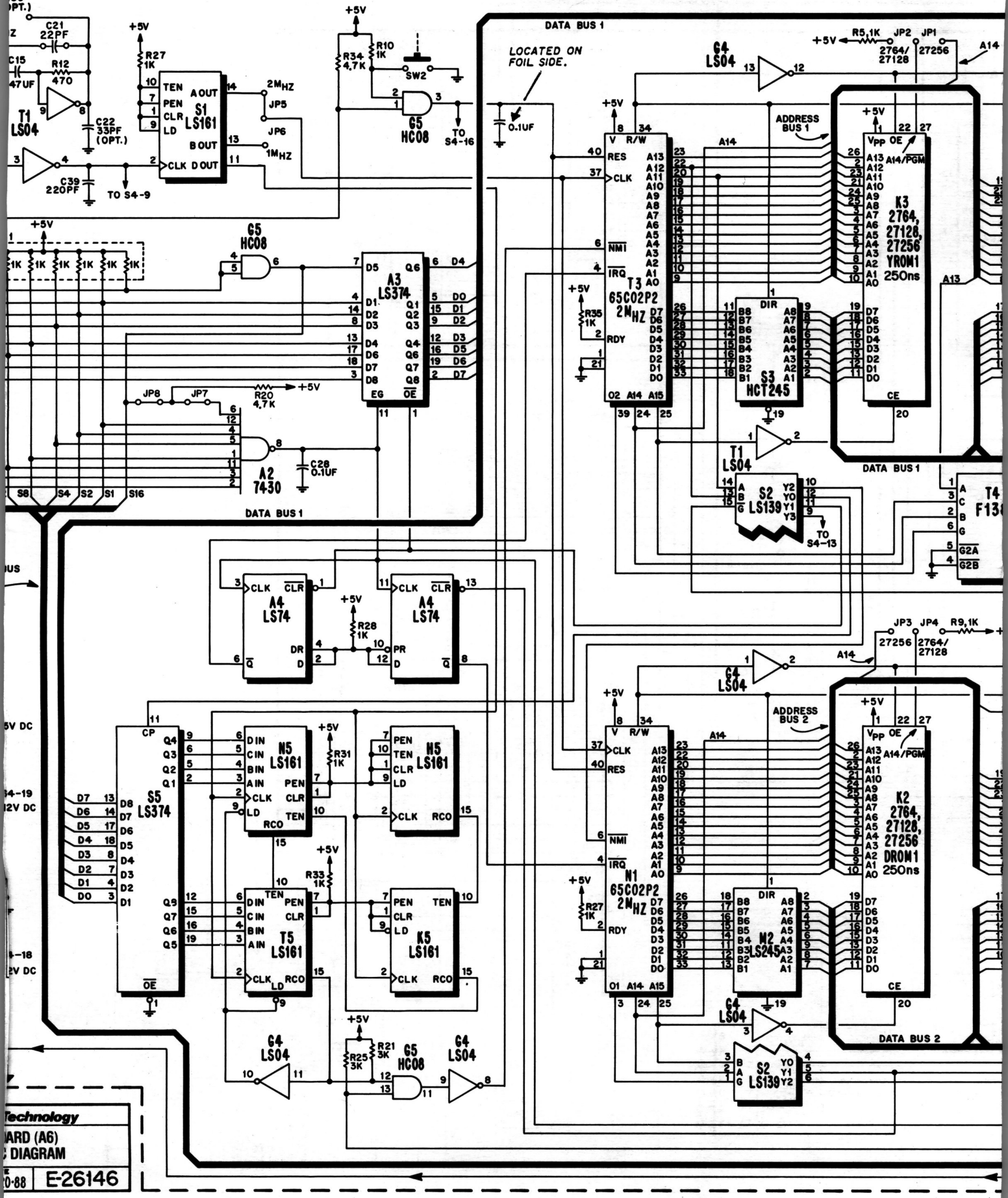
DATA BUS 1
LOCATED ON FOIL SIDE.
0.1UF
G4 LS04
R5,1K
JP2
JP1
2764/27128
27256
A14
ADDRESS BUS 1
K3 2764, 27128, 27256 YROM1 250ns
T3 65C02P2 2MHZ
S3 HCT245
T1 LS04
S2 LS139
TO S4-13
T4 F13
A3 LS374
A2 7430
G5 HC08
R20 4.7K
C28 0.1UF
JP8
JP7
S1 LS161
TO S4-9
TO S4-16
2MHZ
1MHZ
JP5
JP6
R27 1K
R34 4.7K
R10 1K
SW2
C21 22PF
C15 47UF
R12 470
C22 33PF (OPT.)
C39 220PF
T1 LS04
A4 LS74
R28 1K
JP3
JP4
R9,1K
ADDRESS BUS 2
K2 2764, 27128, 27256 DROM1 250ns
N1 65C02P2 2MHZ
M2 LS245
S5 LS374
N5 LS161
H5 LS161
T5 LS161
K5 LS161
R31 1K
R33 1K
R35 1K
R27 1K
R25 3K
R21 3K
DATA BUS 2
Technology
ARD (A6)
DIAGRAM
E-26146

SOUND BOARD (A6) COMPONENT LOCATION

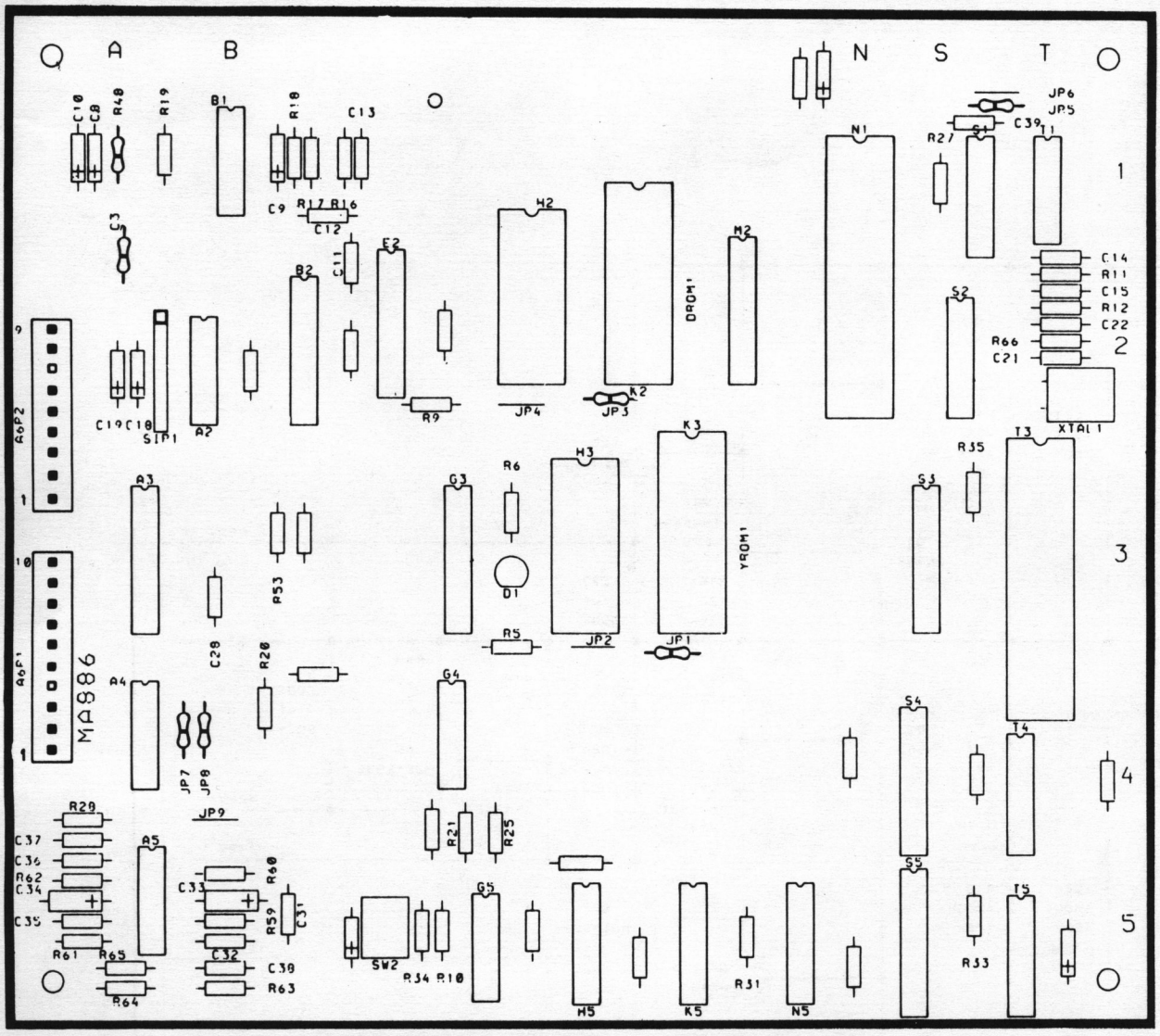

SOUND BOARD (A6) PARTS LIST

REFERENCE	DESCRIPTION	PART NUMBER
	Sound Board Assembly (1A6)	MA-1629
C13,C37	Capacitor, 1UF, 20%, 50V (Non-polar)	XO-746
C8,C9,C10, C18,C19, C33,C34 AND THREE UNMARKED CAPACITORS	Capacitor, 10UF, 20%, 25V (Tantalum)	XO-127
C11,C12	Capacitor, 10PF, +80%-20%, 50V	XO-635
C14,C22	Capacitor, 33PF, 10%, 100V	XO-896
C15	Capacitor, .047UF, 20%, 50V	XO-638
C21	Capacitor, 22PF, 10%, 50V	XO-633
C28 AND FIFTEEN UNMARKED CAPACITORS	Capacitor, 0.1UF, +80%-20%, 50V	XO-230
C31,C32	Capacitor, 0.1UF, 10%, 100V	XO-784
C35	Capacitor, 1000PF, 10%, 100V	XO-296
C36	Capacitor, 2200PF, 10%, 100V	XO-289
C38	Capacitor, .0033UF, 10%, 100V	XO-600
C39	Capacitor, 220PF, 10%, 100V	XO-694
D1	Diode, MV5752, (LED, Red)	XO-270
R5,R9,R10, R27,R28,R31, R33,R35	Resistor, 1K Ohm, 5%, 1/4W	XO-5
R6	Resistor, 240 Ohm, 5%, 1/4W	XO-173
R11,R12	Resistor, 470 Ohm, 5%, 1/4W	XO-35
R21, R25	Resistor, 3K Ohm, 5%, 1/4W	XO-23
R16,R17	Resistor, 10K Ohm, 5%, 1/4W	XO-18
R18	Resistor, 6.8K Ohm, 5%, 1/4W	XO-8

REFERENCE	DESCRIPTION	PART NUMBER
R20,R34	Resistor, 4.7K Ohm, 5%, 1/4W	XO-7
R61-R64	Resistor, 33K Ohm, 5%, 1/4W	XO-43
R59,R60	Resistor, 100K Ohm, 5%, 1/4W	XO-45
R65	Resistor, 27K Ohm, 5%, 1/4W	XO-11
A2	IC, 7430, 8 Input NAND Gate	XO-643
A3,B2,S5	IC, 74LS374, Octal "D" Flip Flop	XO-96
A4	IC, 74LS74, Dual "D" Flip Flop	XO-434
A5, B1	IC, MC3403P, Quad Op-Amp	XO-953
E2	IC, AD7528J, Multiplier DAC	XO-647
G3	IC, 74LS377, Octal "D" Flip Flop	XO-97
G4,T1	IC, 74LS04, Hex Inverter	XO-418
G5	IC, 74HC08, Quad 2 Input "AND" Gate	XO-872
H2,H3	IC, 6116LP-15, 2K X 8 RAM	XO-928
H5,K5,N5	IC, 74LS161, Synchronous Presettable Binary Counter	XO-440
S1,T5	IC, Specified Per Game	
K2,K3	IC, 74LS245, Octal Bus Transceiver	XO-79
M2	IC, 65CO2P2 or 6502A, CPU XO-927 or	XO-893
N1,T3	IC, 74LS139, Dual 1 of 4 Decoder	XO-419
S2	IC, 74HCT245, Octal Bus Tranceiver	XO-891
S3	IC, 74F138 , 1 of 8 Decoder	XO-1041
T4	Resistor Pack 1K Ohm X 8	XO-493
SIP 1	Switch, Pushbutton	XO-897
SW2	Crystal, 4 MHZ	XO-366
XTAL 1	Connector (2)	XO-879
A6P1,A6P2		
	28 Pin Dip Socket (2)	XO-536
	Jumper, Resistor, O OHM (7)	XO-469
	20 Pin Dip Socket	XO-491

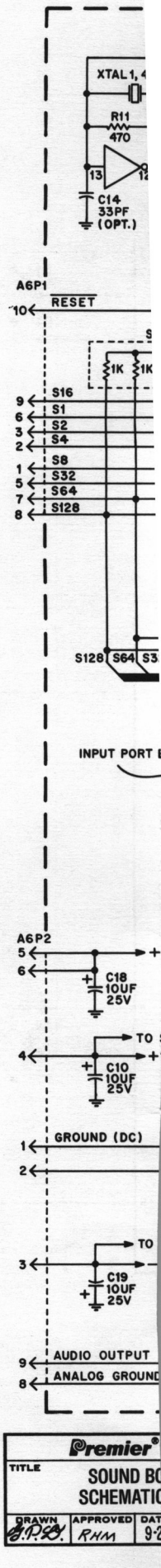

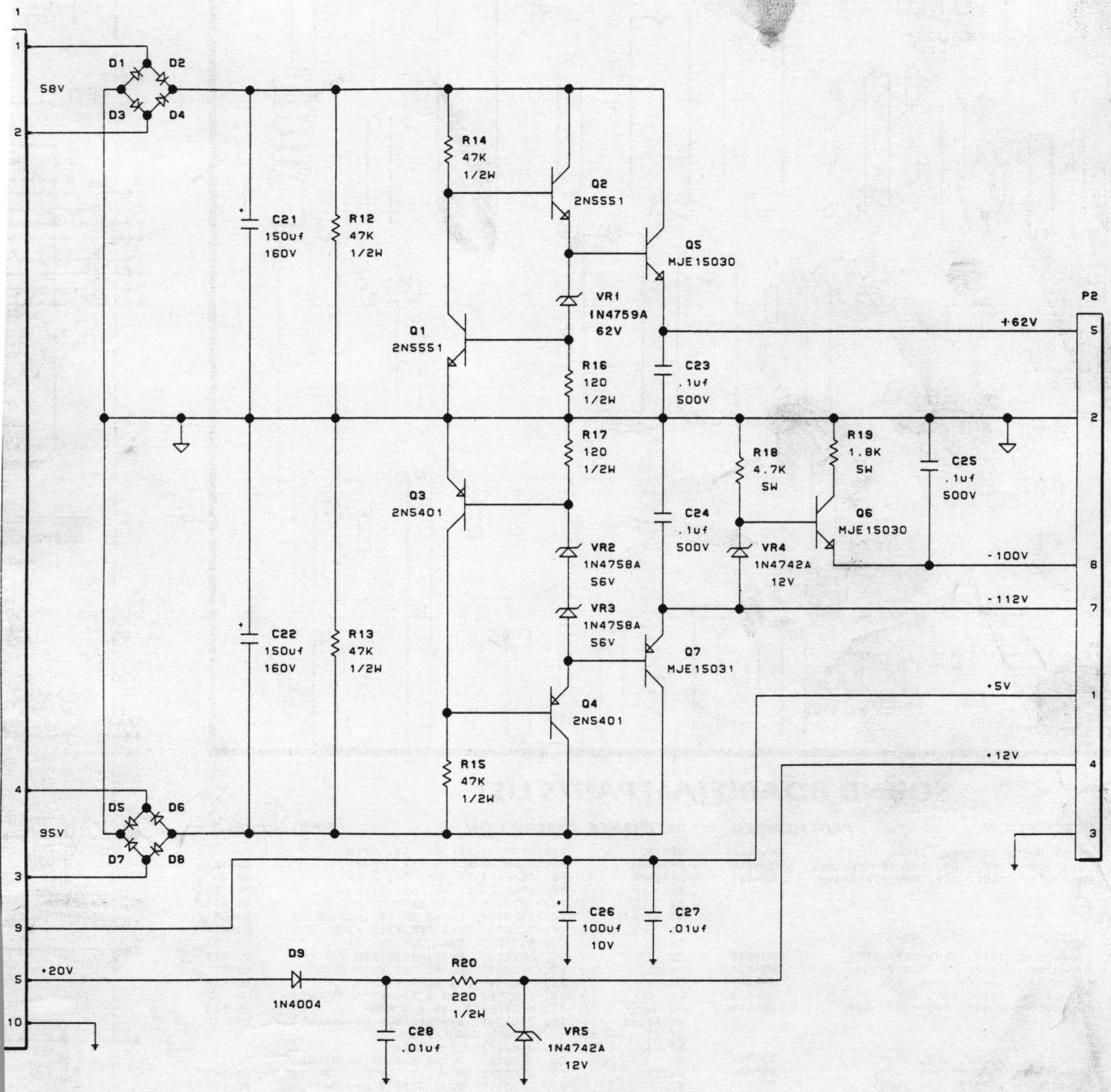

Premier® Technology			
TITLE: DISPLAY CONTROLLER (A8) SCHEMATIC DIAGRAM			
DRAWN: C.B.	APPROVED: RHM	DATE: 4-8-92	MA-1739

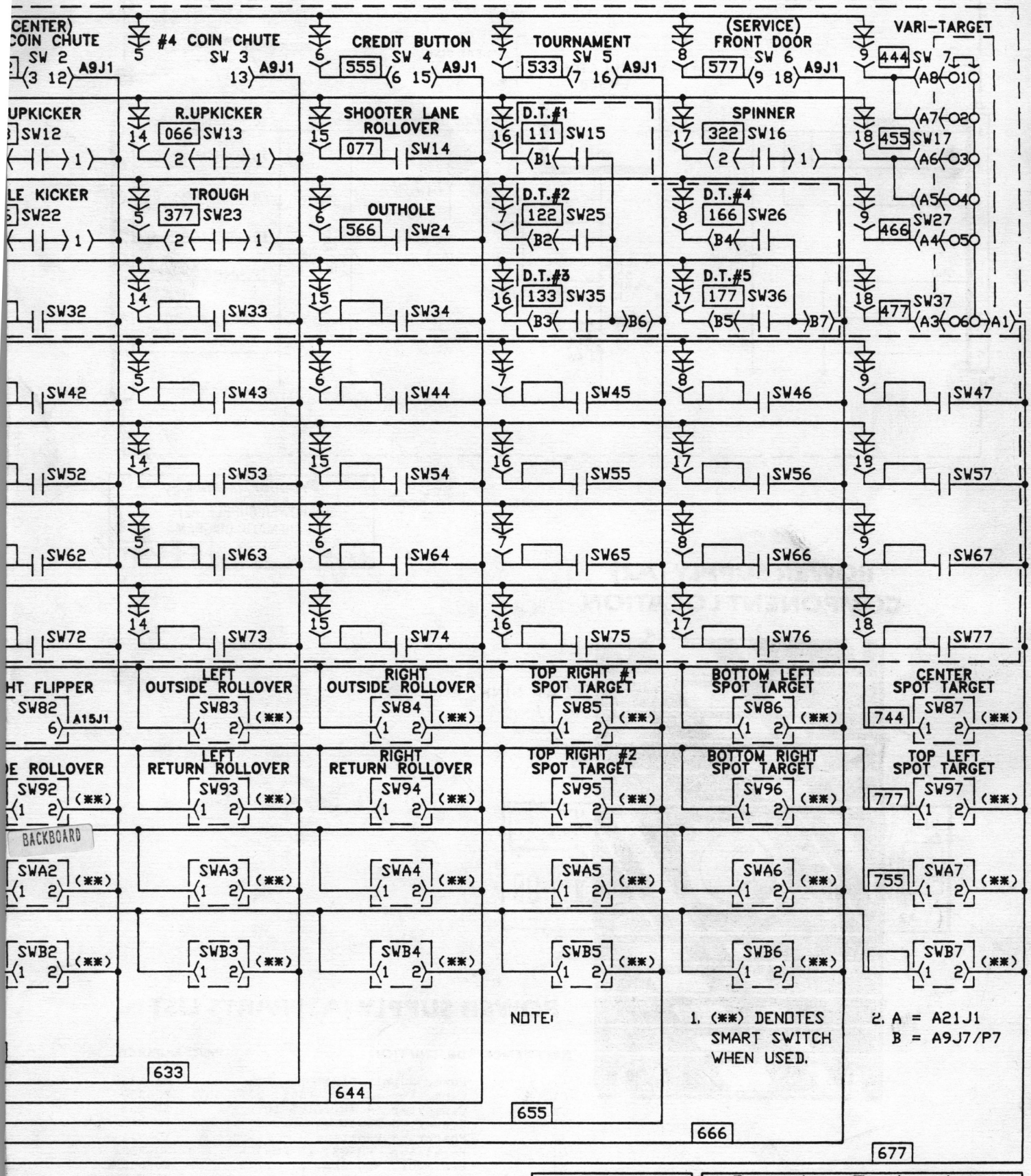

COLOR CODE			
0	BLACK	5	GREEN
1	BROWN	6	BLUE
2	RED	7	VIOLET
3	ORANGE	8	GRAY
4	YELLOW	9	WHITE

Premier Technology

TITLE			
SWITCH MATRIX SCHEMATIC DIAGRAM			
USED ON	DRAWN	DATE	
#743	RLM	10-06-94	30848

VI. WIRING AND SCHEMATIC DIAGRAMS, PARTS LISTS

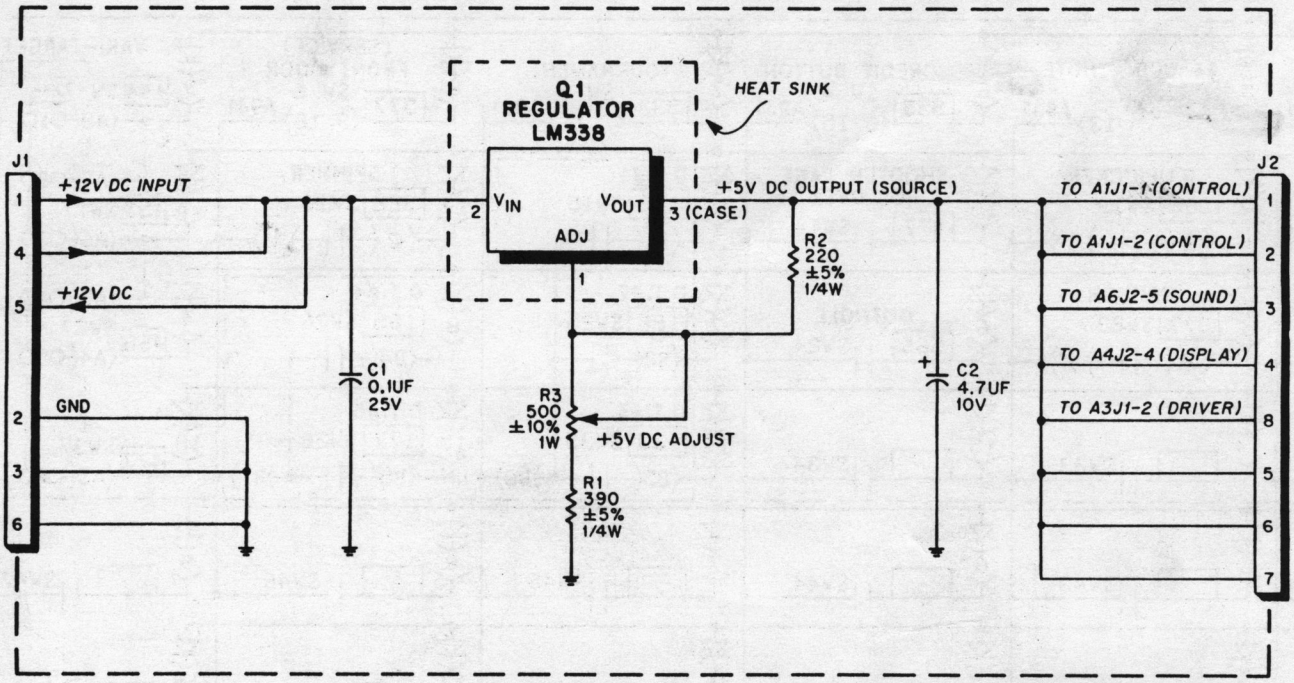

Premier Technology			
TITLE: POWER SUPPLY (A2) SCHEMATIC DIAGRAM			
DRAWN: A.P.S.	APPROVED: RHM	DATE: 12 FEB 85	E-24441

POWER SUPPLY (A2) COMPONENT LOCATION

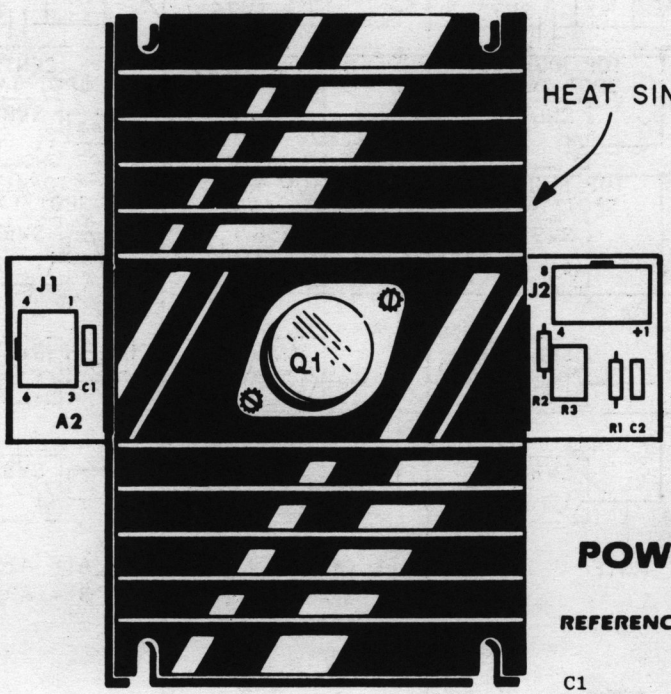

POWER SUPPLY (A2) PARTS LIST

REFERENCE	DESCRIPTION	PART NUMBER
	Power Supply (A2)	MA-1359
C1	Capacitor, 0.1UF, +80% -20%, 50V	XO-230
C2	Capacitor, 4.7UF, 10% 10V	XO-226
J1	Header, 6 Position	XO-910
J2	Header, 8 Position	XO-911
Q1	Regulator, LM338, (5 Amp)	XO-839
R1	Resistor, 390 Ohm, 5%, 1/4W	XO-845
R2	Resistor, 220 Ohm, 5%, 1/4W	XO-21
R3	Resistor, (Pot) 500 Ohm, 10%, 1W	XO-112
	Heat Sink	XO-534
	Insulator (Regulator)	XO-522
	Insulator (Regulator)	XO-523

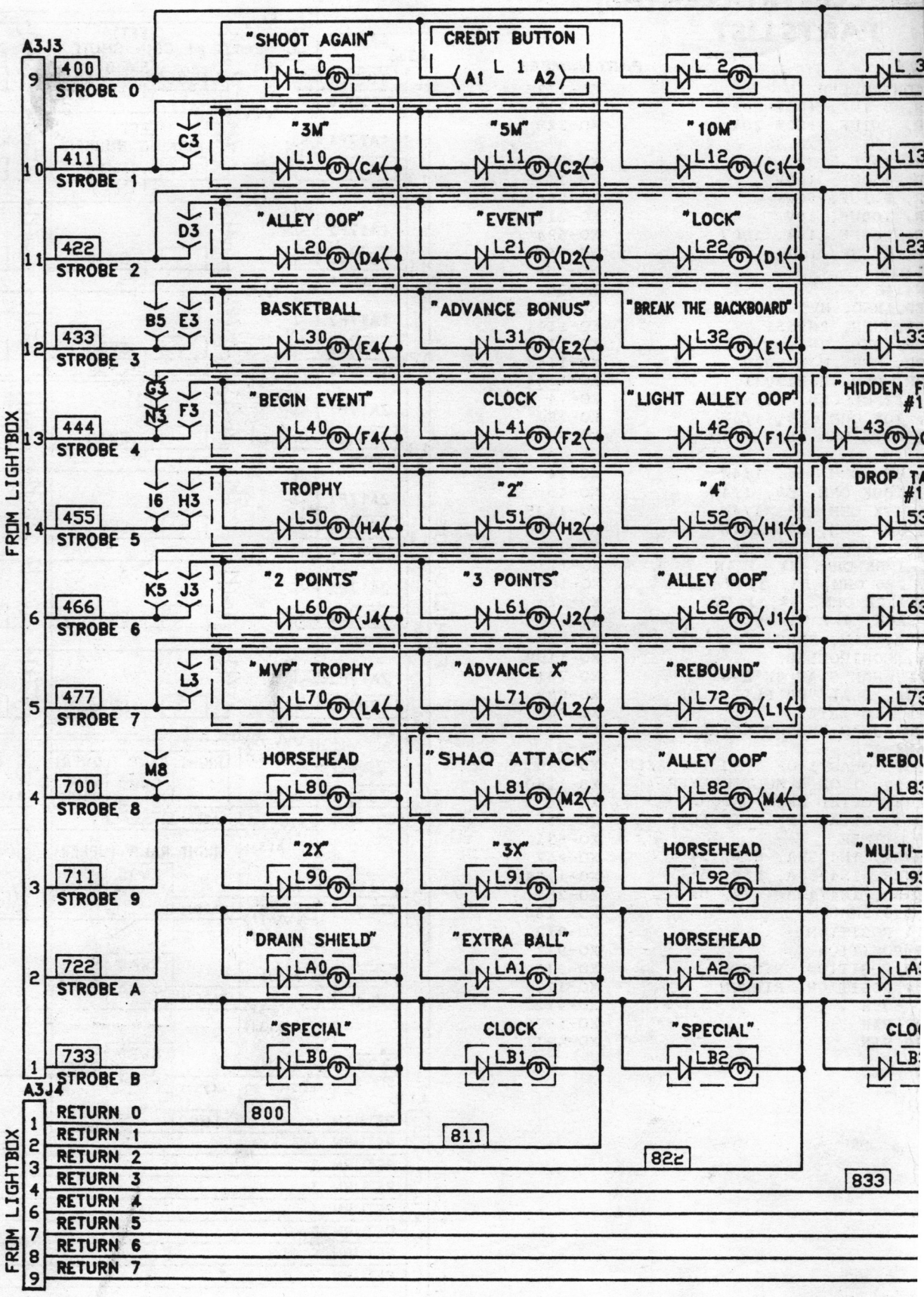

NOTE: 1. ALL LAMP DIODES ARE TYPE 1N4004.

2. ALL LAMPS ARE TYPE #44.

2. A = A9J6
N = A9J21/P21

B = 1A22.
C = 2A22.
D = 3A22.
E = 4A22.

LAY CONTROLLER (A8) PARTS LIST

ION	PART NUMBER
CONTROLLER	MA-1739
R, 0.1UF, +80%-20%	XO-230
R, .01UF, +80%-20%	XO-229
R, 33PF, 10%, 100V	XO-896
R, 150UF, 160V	XO-1133
R, 0.1UF, 500V	XO-886
R, 100UF, 10V	XO-211
R, 220PF, 10%, 100V	XO-694
R, 0.1UF, 100V	XO-784
N4004	XO-254
N4148	XO-261
ED, RED, MV5752	XO-270
OR, NPN, 2N5551	XO-1141
OR, PNP, 2N5401	XO-1142
OR, NPN, MJE15030	XO-1143
OR, PNP, MJE15031	XO-1144
, 22 MEGOHM, 5%, 1/4W	XO-74
, 10K OHM, 5%, 1/4W	XO-18
, 4.7K OHM, 5%, 1/4W	XO-7
, 330 OHM, 5%, 1/4W	XO-34
, 100K OHM, 5%, 1/4W	XO-45
, 47K OHM, 5%, 1/4W	XO-1135
, 120 OHM, 5%, 1/4W	XO-1136
, 4.7K OHM, 5%, 5W	XO-1137
, 1.8K OHM, 5%, 1/4W	XO-1138
, 220 OHM, 5%, 1/4W	XO-185
, 2.2K OHM, 5%, 1/4W	XO-27
PACK, 4.7 OHM	XO-906
2P2, CPU, 2MHZ	XO-927
5, CONTROLLER	XO-1139
LP, RAM STAT 8K X 8	XO-781
T74, DUAL "D" FLIP-FLOP	XO-889
04, INVERTER	XO-888
00, QUAD "NAND" GATES	XO-782
6V8-25L	U8-G
157, QUAD 1 OF 2 MULTIPLEXER	XO-390
T354, 1 OF 8 MULTIPLEXER	XO-1140
273, OCTAL DATA LATCH	XO-94
374, OCTAL "D" FLIP-FLOP	XO-96
5, TIMER	XO-631
ENER, 1N4759A, 62V, 5%	XO-267
ENER, 1N4758A, 56V, 5%	XO-1164
ENER, 1N4742A, 12V, 5%	XO-257
3.579MHZ	XO-1166
10 POSITION	XO-912
8 POSITION	XO-911
20 POSITION, RIBBON	XO-940
14 POSITION, RIBBON	XO-1134
, 6038	XO-472
32 PIN	XO-1036
20 PIN	XO-491

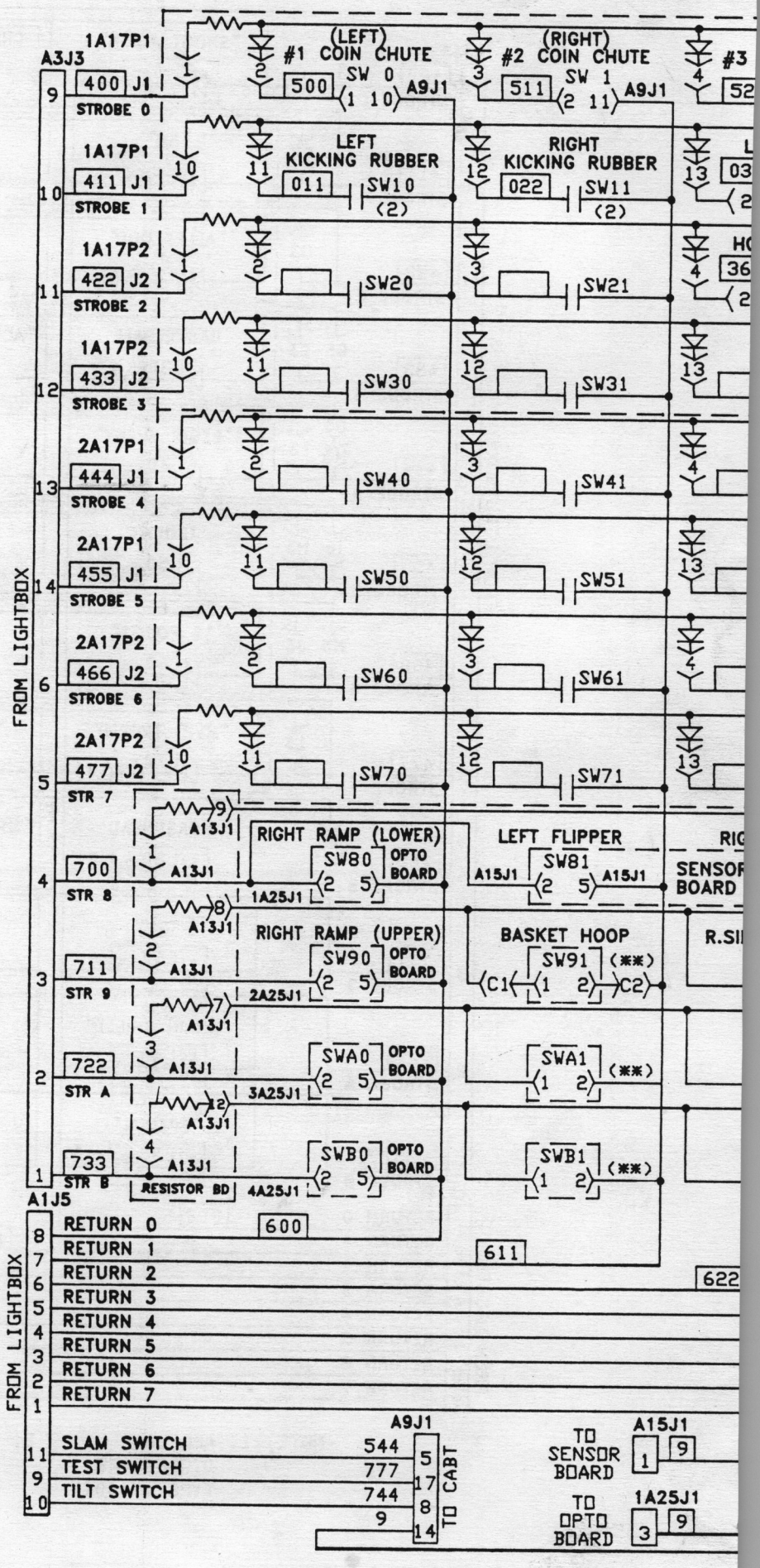

DISPLAY CONTROLLER (A8) COMPONENT LOCATION

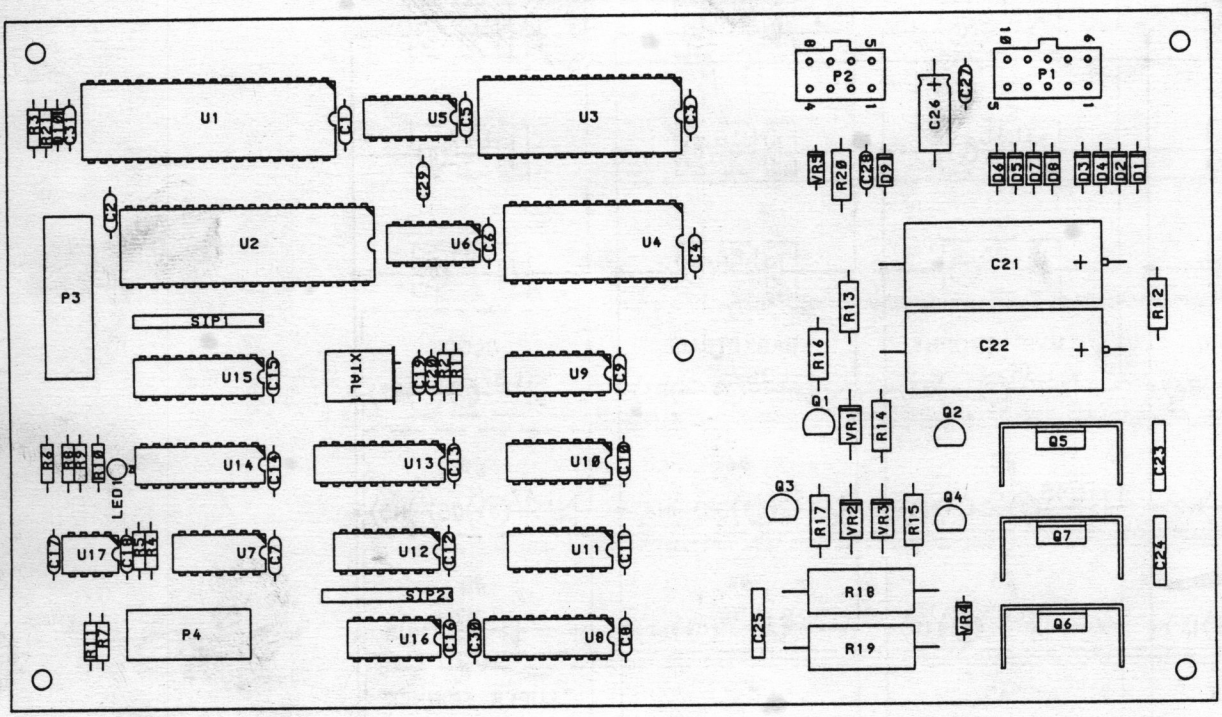

DOT MATRIX DISPLAY (A4)

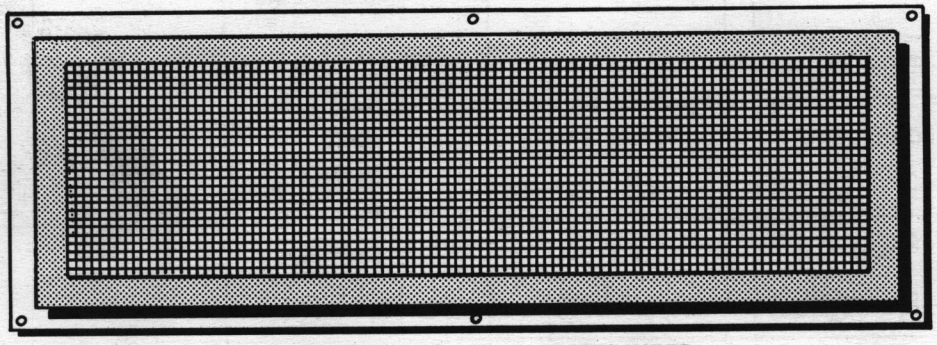

DESCRIPTION	PART NUMBER
DOT MATRIX DISPLAY	29151

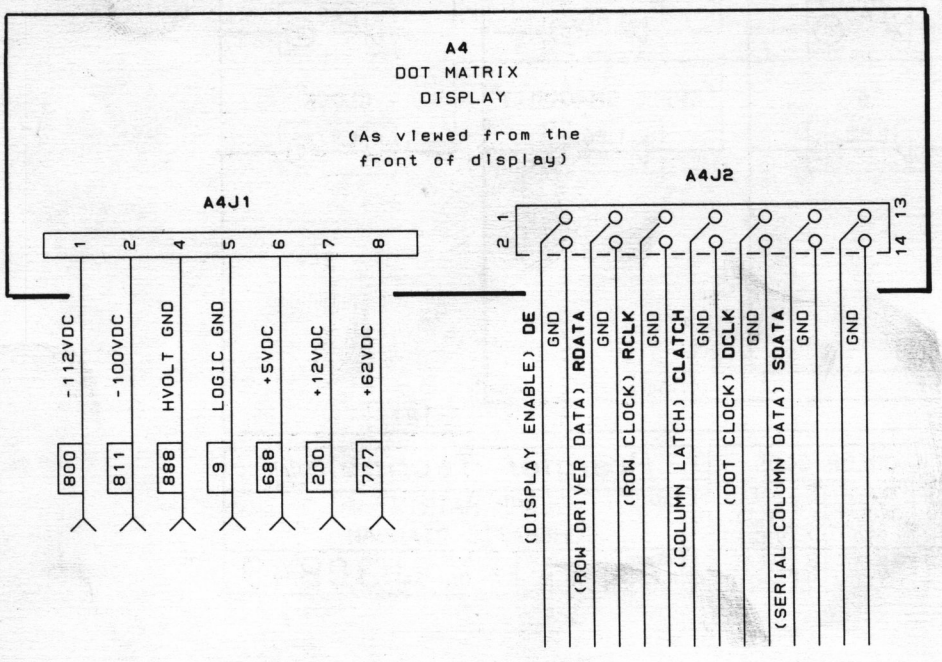

DISP

REFERENCE	DESCRIPT
A8	DISPLAY
C1-C3	CAPACITO
C4-C18	CAPACITO
C27, C28	
C19, C20	CAPACITO
C21, C22	CAPACITO
C23, C25	CAPACITO
C26	CAPACITO
C29, C30	CAPACITO
C31	CAPACITO
D1-D9	DIODE,
D10	DIODE,
LED 1	DIODE,
Q1, Q2	TRANSIS
Q3, Q4	TRANSIS
Q5, Q6	TRANSIS
Q7	TRANSIS
R1	RESISTO
R2	RESISTO
R3-R6, R8, R9	RESISTO
R10	RESISTO
R11	RESISTO
R12-R15	RESISTO
R16-R17	RESISTO
R18	RESISTO
R19	RESISTO
R20	RESISTO
R21	RESISTO
SIP1, SIP2	RESISTO
U1	IC, 65C
U2	IC, 68B
U4	IC, 626
U5,U16	IC, 74H
U6	IC, 74H
U7	IC, 74H
U8	IC, GAL
U9-U12	IC, 74L
U13	IC, 74H
U14	IC, 74L
U15	IC, 74L
U17	IC, NE5
VR1	DIODE,
VR2,VR3	DIODE,
VR4,VR5	DIODE,
XTAL1	CRYSTAL
P1	HEADER,
P2	HEADER,
P3	HEADER,
P4	HEADER,
	HEATSIN
	SOCKET,
	SOCKET,

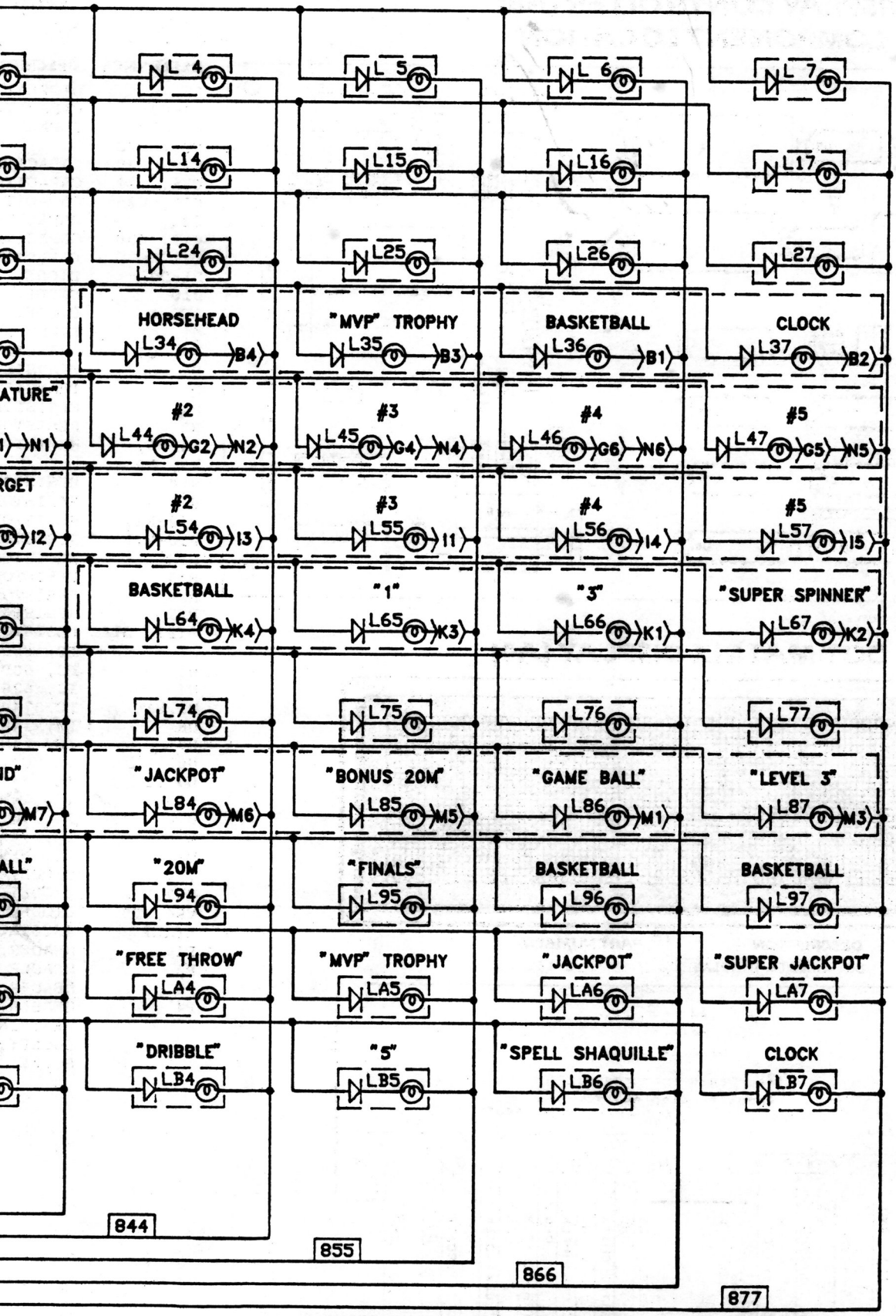

F = 5A22J1 J = 9A22J1
G = 6A22J1 K = 10A22J1
H = 7A22J1 L = 11A22J1
I = 8A22J1 M = 12A22J1

COLOR CODE			
0	BLACK	5	GREEN
1	BROWN	6	BLUE
2	RED	7	VIOLET
3	ORANGE	8	GRAY
4	YELLOW	9	WHITE

Premier Technology

TITLE: LAMP MATRIX SCHEMATIC DIAGRAM

USED ON	DRAWN	DATE	
#743	RLM	10-06-94	30849

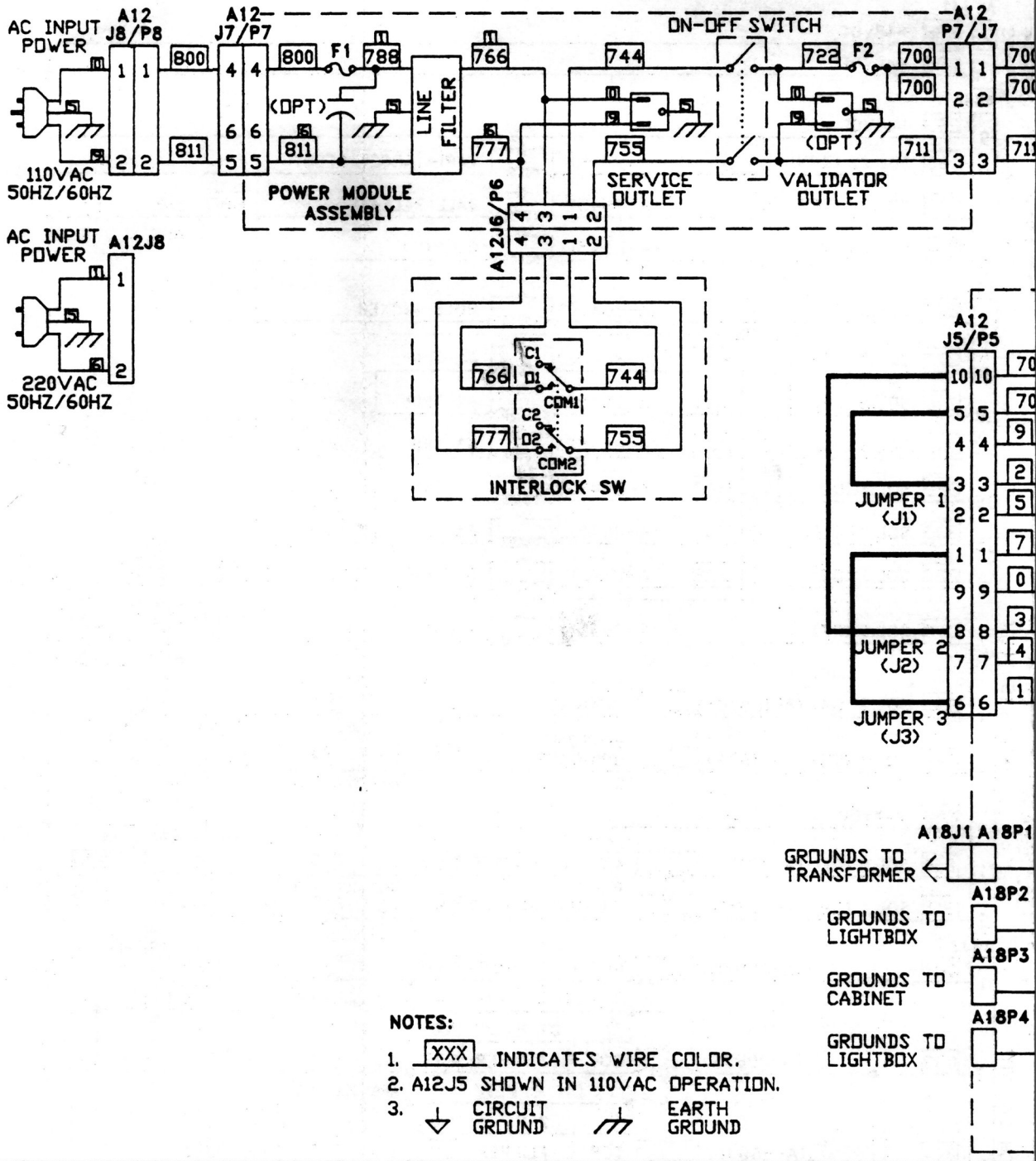

NOTES:

1. XXX INDICATES WIRE COLOR.
2. A12J5 SHOWN IN 110VAC OPERATION.
3. CIRCUIT GROUND ⏚ EARTH GROUND ⏚

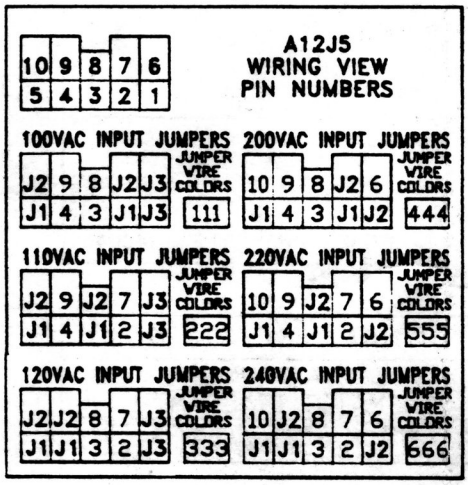
A12J5 WIRING VIEW PIN NUMBERS
10 9 8 7 6
5 4 3 2 1
100VAC INPUT JUMPERS
J2 9 8 J2 J3
J1 4 3 J1 J3
JUMPER WIRE COLORS 111
200VAC INPUT JUMPERS
10 9 8 J2 6
J1 4 3 J1 J2
JUMPER WIRE COLORS 444
110VAC INPUT JUMPERS
J2 9 J2 7 J3
J1 4 J1 2 J3
JUMPER WIRE COLORS 222
220VAC INPUT JUMPERS
10 9 J2 7 6
J1 4 J1 2 J2
JUMPER WIRE COLORS 555
120VAC INPUT JUMPERS
J2 J2 8 7 J3
J1 J1 3 2 J3
JUMPER WIRE COLORS 333
240VAC INPUT JUMPERS
10 J2 8 7 6
J1 J1 3 2 J2
JUMPER WIRE COLORS 666

FUSE DESIGNATIONS TABLE			
FUSE	RATING	PART NO.	USAGE
F1	8.0A SLO-BLO	EL26	LINE INPUT
	4.0A SLO-BLO	EL33	LINE INPUT
F2	5.0A SLO-BLO	EL 8	PRIMARY POWER
	2.5A SLO-BLO	EL21	PRIMARY POWER
F3	3/8A SLO-BLO	EL31	DISPLAY
F4	3/8A SLO-BLO	EL31	DISPLAY
F5	4.0A SLO-BLO	EL33	POWER SUPPLY
F6	10A SLO-BLO	EL36	CONTROLLED LAMPS
F7	8.0A SLO-BLO	EL26	SOLENOIDS
F8	15A	EL25	LIGHTBOX INSERT ILLUMINATI
F9	10A	EL23	PLAYBOARD ILLUMINATION
F10	3.0A SLO-BLO	EL 9	AUXILLIARY POWER SUPPLY
F11	3.0A SLO-BLO	EL 9	AUXILLIARY POWER SUPPLY
F12			

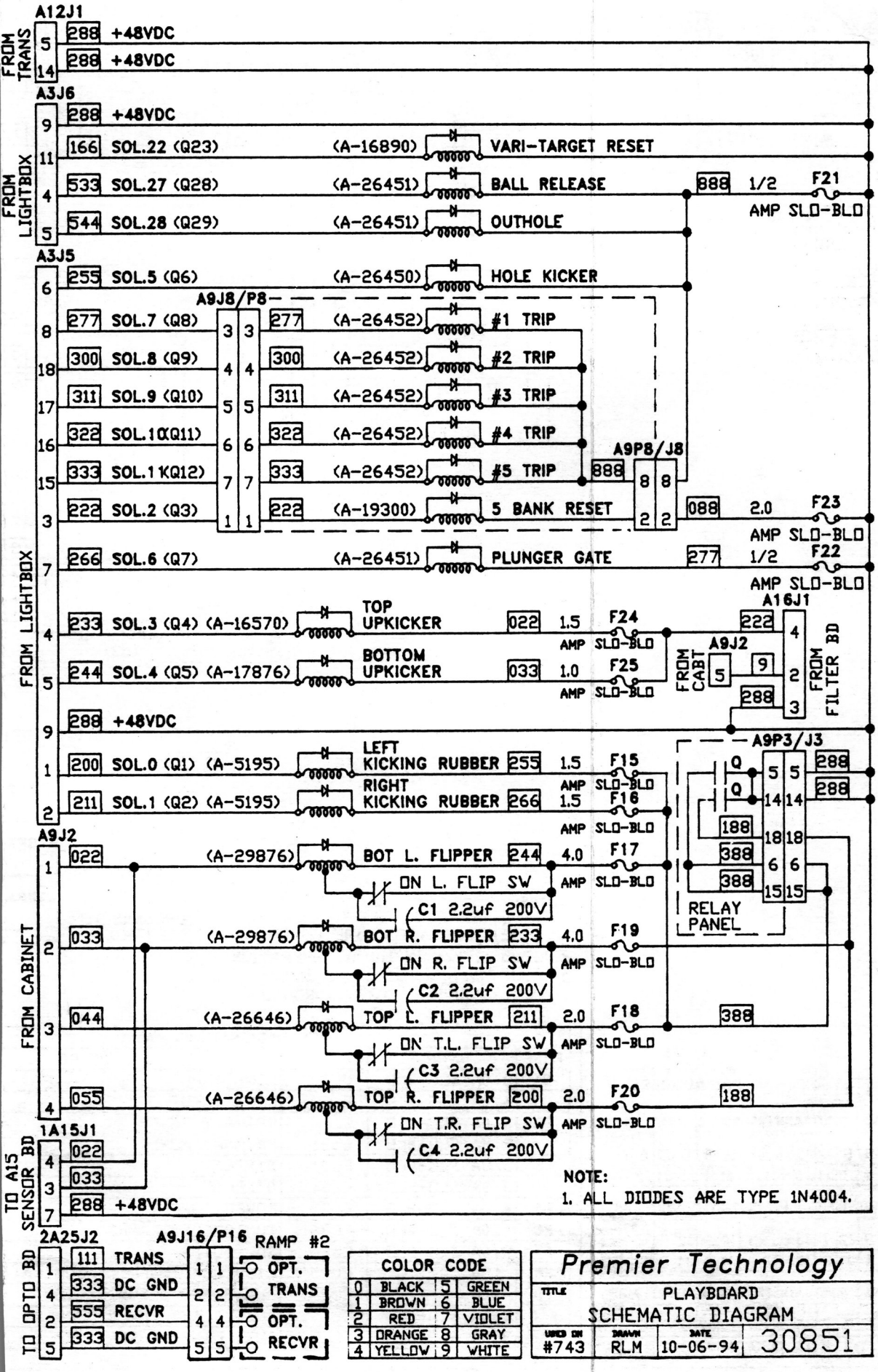
A12J1
FROM TRANS
5 288 +48VDC
14 288 +48VDC
A3J6
FROM LIGHTBOX
9 288 +48VDC
11 166 SOL.22 (Q23) (A-16890) VARI-TARGET RESET
4 533 SOL.27 (Q28) (A-26451) BALL RELEASE
5 544 SOL.28 (Q29) (A-26451) OUTHOLE
888 1/2 AMP SLO-BLO F21
A3J5
6 255 SOL.5 (Q6) (A-26450) HOLE KICKER
A9J8/P8
8 277 SOL.7 (Q8) 3 3 277 (A-26452) #1 TRIP
18 300 SOL.8 (Q9) 4 4 300 (A-26452) #2 TRIP
17 311 SOL.9 (Q10) 5 5 311 (A-26452) #3 TRIP
16 322 SOL.10 (Q11) 6 6 322 (A-26452) #4 TRIP
15 333 SOL.11 (Q12) 7 7 333 (A-26452) #5 TRIP
3 222 SOL.2 (Q3) 1 1 222 (A-19300) 5 BANK RESET
A9P8/J8
888 8 8
2 2
088 2.0 AMP SLO-BLO F23
7 266 SOL.6 (Q7) (A-26451) PLUNGER GATE
277 1/2 AMP SLO-BLO F22
FROM LIGHTBOX
4 233 SOL.3 (Q4) (A-16570) TOP UPKICKER 022 1.5 AMP SLO-BLO F24
5 244 SOL.4 (Q5) (A-17876) BOTTOM UPKICKER 033 1.0 AMP SLO-BLO F25
A16J1
222 4
2
288 3
FROM FILTER BD
FROM CABT
A9J2
5 9
288
9 288 +48VDC
1 200 SOL.0 (Q1) (A-5195) LEFT KICKING RUBBER 255 1.5 AMP SLO-BLO F15
2 211 SOL.1 (Q2) (A-5195) RIGHT KICKING RUBBER 266 1.5 AMP SLO-BLO F16
A9P3/J3
Q 5 5 288
Q 14 14 288
188 18 18
388 6 6
388 15 15
RELAY PANEL
A9J2
FROM CABINET
1 022 (A-29876) BOT L. FLIPPER 244 4.0 AMP SLO-BLO F17
ON L. FLIP SW
C1 2.2uf 200V
2 033 (A-29876) BOT R. FLIPPER 233 4.0 AMP SLO-BLO F19
ON R. FLIP SW
C2 2.2uf 200V
3 044 (A-26646) TOP L. FLIPPER 211 2.0 AMP SLO-BLO F18
388
ON T.L. FLIP SW
C3 2.2uf 200V
4 055 (A-26646) TOP R. FLIPPER 200 2.0 AMP SLO-BLO F20
188
ON T.R. FLIP SW
C4 2.2uf 200V
1A15J1
TO A15 SENSOR BD
4 022
3 033
7 288 +48VDC
NOTE:
1. ALL DIODES ARE TYPE 1N4004.
2A25J2
TO OPTO BD
1 111 TRANS
4 333 DC GND
2 555 RECVR
5 333 DC GND
A9J16/P16
1 1
2 2
4 4
5 5
RAMP #2
OPT.
TRANS
OPT.
RECVR

COLOR CODE			
0	BLACK	5	GREEN
1	BROWN	6	BLUE
2	RED	7	VIOLET
3	ORANGE	8	GRAY
4	YELLOW	9	WHITE

Premier Technology			
TITLE: PLAYBOARD SCHEMATIC DIAGRAM			
USED ON: #743	DRAWN: RLM	DATE: 10-06-94	30851

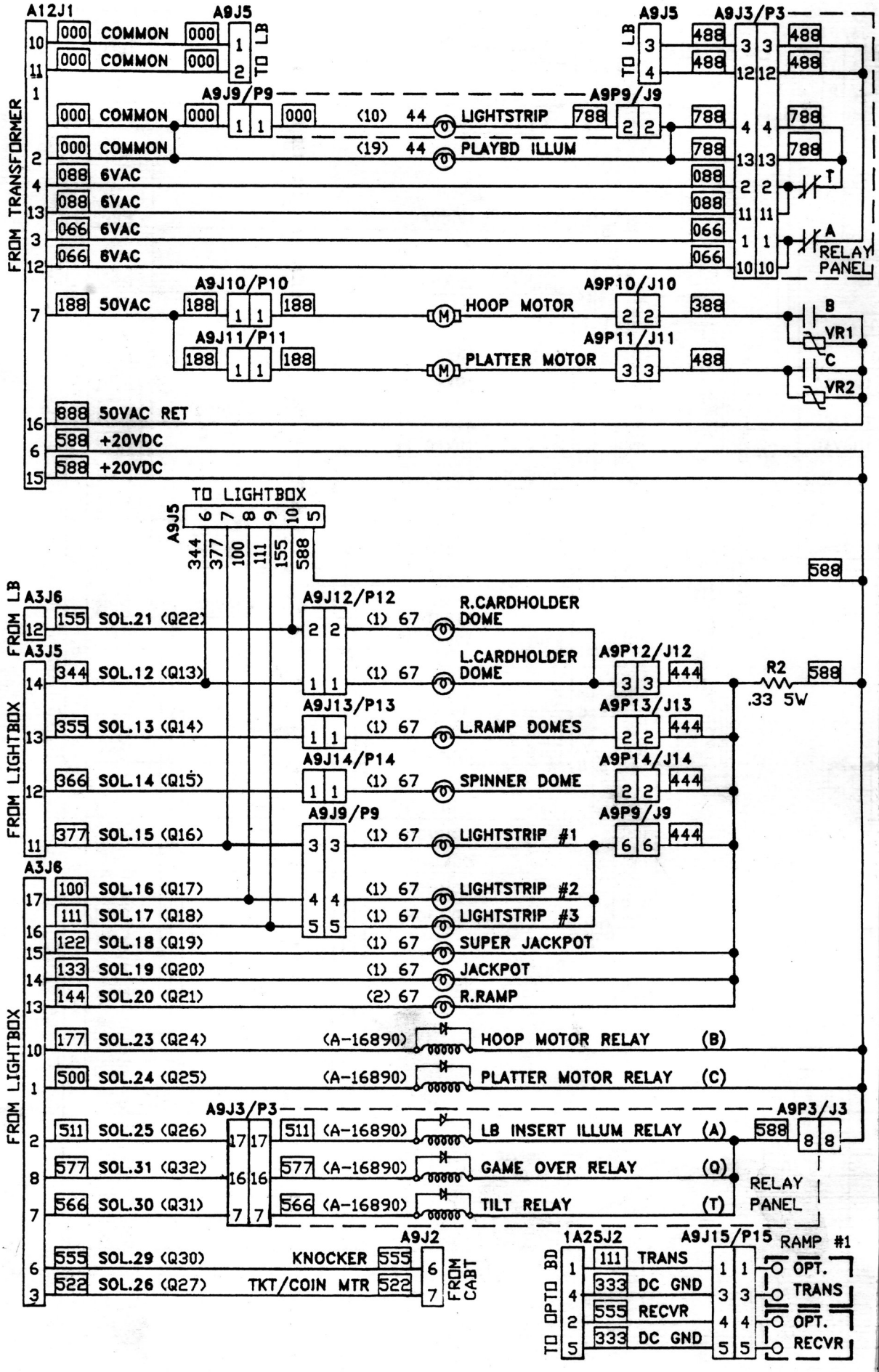
A12J1
FROM TRANSFORMER
000 COMMON
000 COMMON
000 COMMON
000 COMMON
088 6VAC
088 6VAC
066 6VAC
066 6VAC
188 50VAC
888 50VAC RET
588 +20VDC
588 +20VDC
A9J5
TO LB
A9J9/P9
A9J10/P10
A9J11/P11
A9J5
TO LB
A9P9/J9
A9P10/J10
A9P11/J11
A9J3/P3
RELAY PANEL
(10) 44 LIGHTSTRIP
(19) 44 PLAYBD ILLUM
HOOP MOTOR
PLATTER MOTOR
T
A
B
VR1
C
VR2
TO LIGHTBOX
A9J5
344
377
100
111
155
588
FROM LB
A3J6
155 SOL.21 (Q22)
A3J5
344 SOL.12 (Q13)
A9J12/P12
R.CARDHOLDER DOME
L.CARDHOLDER DOME
A9P12/J12
R2 .33 5W
FROM LIGHTBOX
355 SOL.13 (Q14)
A9J13/P13
L.RAMP DOMES
A9P13/J13
366 SOL.14 (Q15)
A9J14/P14
SPINNER DOME
A9P14/J14
377 SOL.15 (Q16)
A9J9/P9
LIGHTSTRIP #1
A9P9/J9
A3J6
100 SOL.16 (Q17)
LIGHTSTRIP #2
111 SOL.17 (Q18)
LIGHTSTRIP #3
122 SOL.18 (Q19)
SUPER JACKPOT
133 SOL.19 (Q20)
JACKPOT
144 SOL.20 (Q21)
R.RAMP
FROM LIGHTBOX
177 SOL.23 (Q24)
(A-16890)
HOOP MOTOR RELAY (B)
500 SOL.24 (Q25)
PLATTER MOTOR RELAY (C)
A9J3/P3
A9P3/J3
511 SOL.25 (Q26)
LB INSERT ILLUM RELAY (A)
577 SOL.31 (Q32)
GAME OVER RELAY (Q)
566 SOL.30 (Q31)
TILT RELAY (T)
RELAY PANEL
A9J2
555 SOL.29 (Q30)
KNOCKER
522 SOL.26 (Q27)
TKT/COIN MTR
FROM CABT
1A25J2
TO OPTO BD
111 TRANS
333 DC GND
555 RECVR
333 DC GND
A9J15/P15
RAMP #1
OPT. TRANS
OPT. RECVR

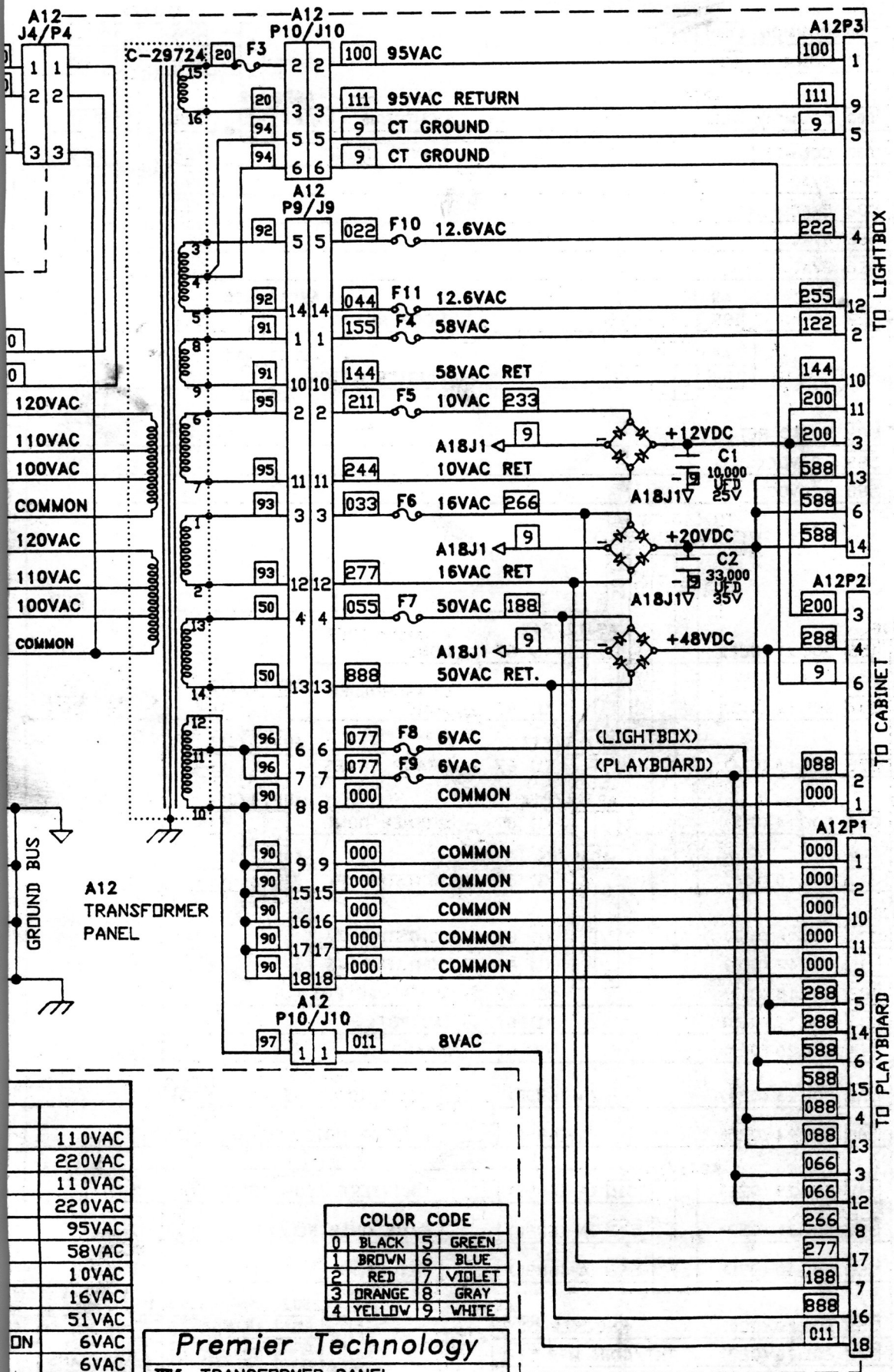

	110VAC
	220VAC
	110VAC
	220VAC
	95VAC
	58VAC
	10VAC
	16VAC
	51VAC
ON	6VAC
	6VAC
	12.6VAC
	12.6VAC

COLOR CODE			
0	BLACK	5	GREEN
1	BROWN	6	BLUE
2	RED	7	VIOLET
3	ORANGE	8	GRAY
4	YELLOW	9	WHITE

Premier Technology

TITLE			
TRANSFORMER PANEL SCHEMATIC DIAGRAM			
USED ON	DRAWN	DATE	30852
#743	RLM	10-06-94	

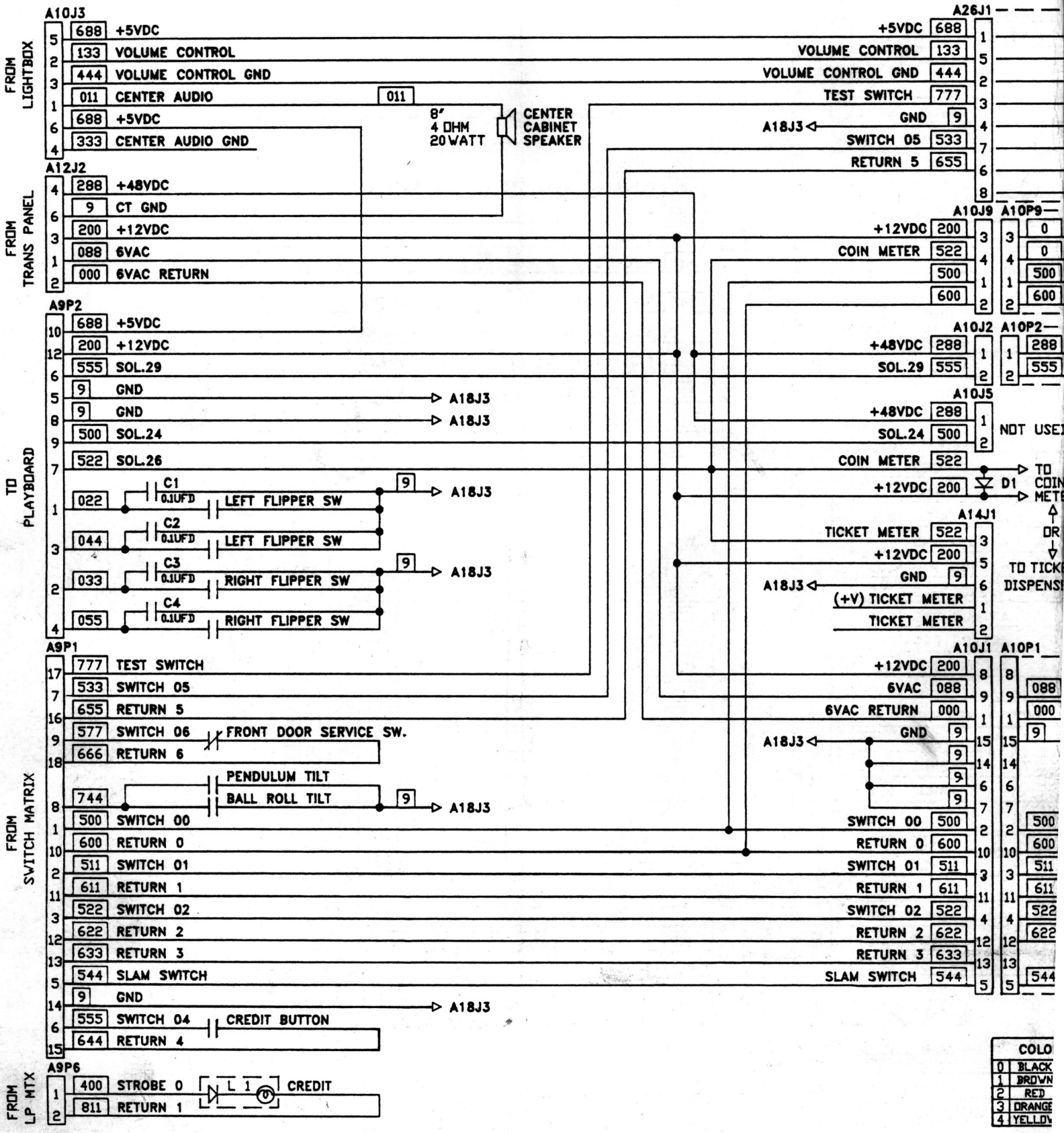
A10J3
FROM LIGHTBOX
688 +5VDC
133 VOLUME CONTROL
444 VOLUME CONTROL GND
011 CENTER AUDIO
688 +5VDC
333 CENTER AUDIO GND
011
8"
4 OHM
20 WATT
CENTER CABINET SPEAKER
A12J2
FROM TRANS PANEL
288 +48VDC
9 CT GND
200 +12VDC
088 6VAC
000 6VAC RETURN
A9P2
TO PLAYBOARD
688 +5VDC
200 +12VDC
555 SOL.29
9 GND
9 GND
500 SOL.24
522 SOL.26
C1 0.1UFD
022
LEFT FLIPPER SW
C2 0.1UFD
044
LEFT FLIPPER SW
C3 0.1UFD
033
RIGHT FLIPPER SW
C4 0.1UFD
055
RIGHT FLIPPER SW
9
A18J3
A9P1
FROM SWITCH MATRIX
777 TEST SWITCH
533 SWITCH 05
655 RETURN 5
577 SWITCH 06
FRONT DOOR SERVICE SW.
666 RETURN 6
PENDULUM TILT
744
BALL ROLL TILT
500 SWITCH 00
600 RETURN 0
511 SWITCH 01
611 RETURN 1
522 SWITCH 02
622 RETURN 2
633 RETURN 3
544 SLAM SWITCH
9 GND
555 SWITCH 04
CREDIT BUTTON
644 RETURN 4
A9P6
FROM LP MTX
400 STROBE 0
L 1
CREDIT
811 RETURN 1
A26J1
+5VDC 688
VOLUME CONTROL 133
VOLUME CONTROL GND 444
TEST SWITCH 777
A18J3 GND 9
SWITCH 05 533
RETURN 5 655
A10J9 A10P9
+12VDC 200
COIN METER 522
500
600
A10J2 A10P2
+48VDC 288
SOL.29 555
A10J5
+48VDC 288
SOL.24 500
NOT USE
COIN METER 522
TO COIN METE
+12VDC 200
D1
OR
A14J1
TICKET METER 522
+12VDC 200
A18J3 GND 9
(+V) TICKET METER
TICKET METER
TO TICK DISPENS
A10J1 A10P1
+12VDC 200
6VAC 088
6VAC RETURN 000
A18J3 GND 9
9
9
9
SWITCH 00 500
RETURN 0 600
SWITCH 01 511
RETURN 1 611
SWITCH 02 522
RETURN 2 622
RETURN 3 633
SLAM SWITCH 544
088
000
9
500
600
511
611
522
622
544
COLO
0 BLACK
1 BROWN
2 RED
3 ORANGE
4 YELLO

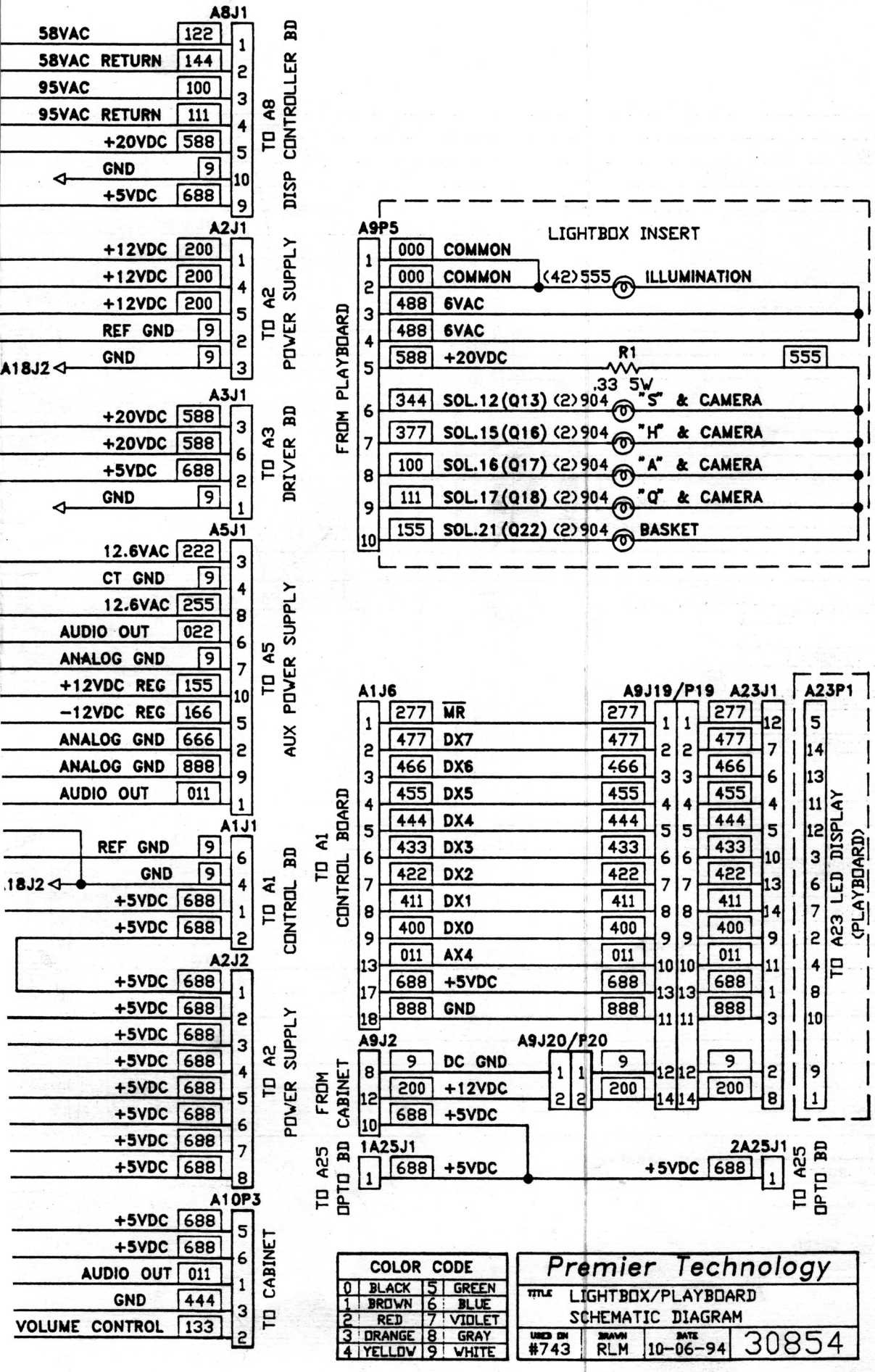

COLOR CODE			
0	BLACK	5	GREEN
1	BROWN	6	BLUE
2	RED	7	VIOLET
3	ORANGE	8	GRAY
4	YELLOW	9	WHITE

Premier Technology

TITLE: LIGHTBOX/PLAYBOARD SCHEMATIC DIAGRAM

USED ON	DRAWN	DATE	
#743	RLM	10-06-94	30854

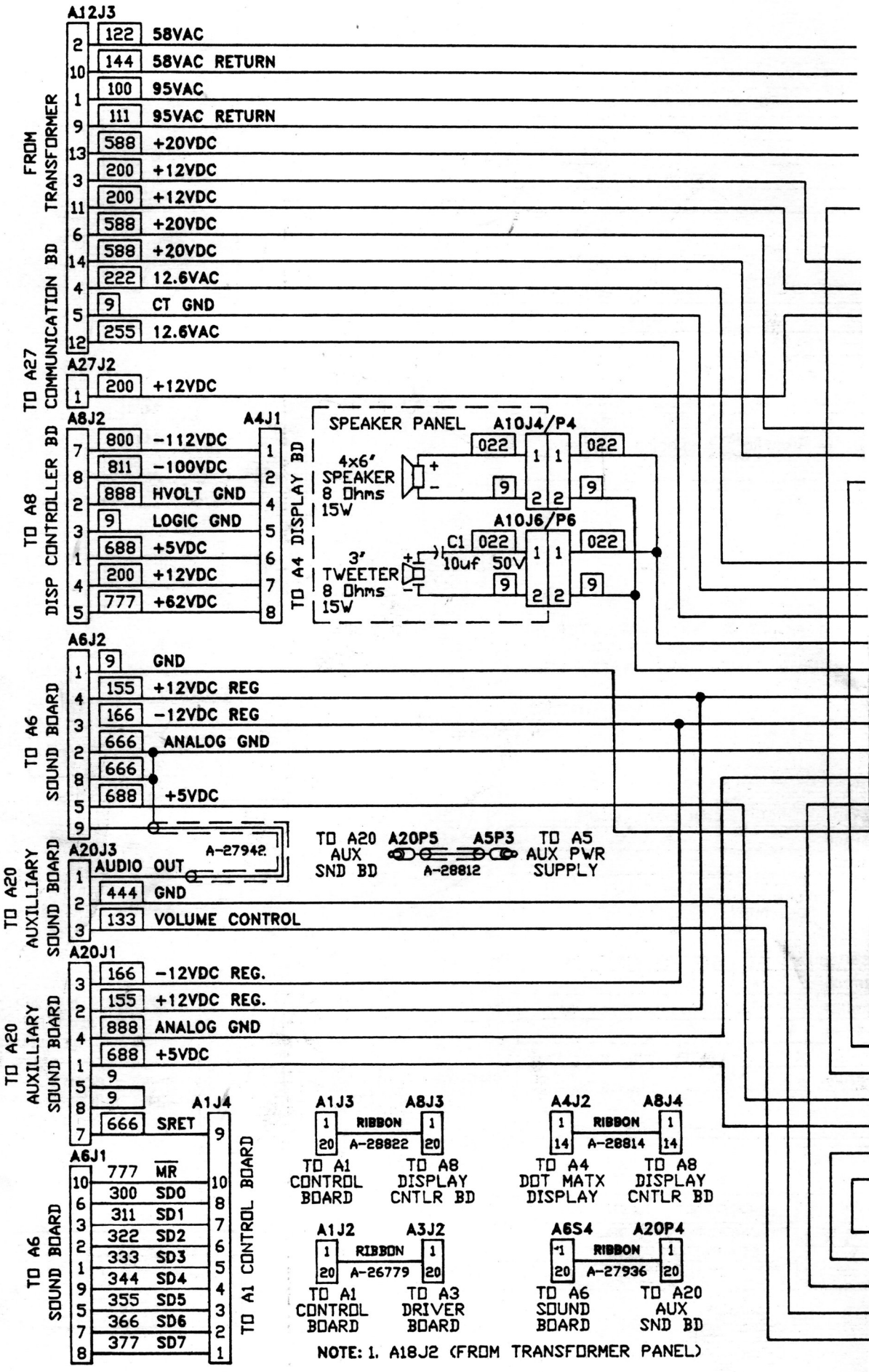
A12J3
FROM TRANSFORMER
122 58VAC
144 58VAC RETURN
100 95VAC
111 95VAC RETURN
588 +20VDC
200 +12VDC
200 +12VDC
588 +20VDC
588 +20VDC
222 12.6VAC
9 CT GND
255 12.6VAC
TO A27 COMMUNICATION BD
A27J2
200 +12VDC
A8J2
TO A8 DISP CONTROLLER BD
800 -112VDC
811 -100VDC
888 HVOLT GND
9 LOGIC GND
688 +5VDC
200 +12VDC
777 +62VDC
A4J1
TO A4 DISPLAY BD
SPEAKER PANEL
A10J4/P4
4x6' SPEAKER 8 Ohms 15W
A10J6/P6
C1 10uf 50V
3' TWEETER 8 Ohms 15W
A6J2
TO A6 SOUND BOARD
9 GND
155 +12VDC REG
166 -12VDC REG
666 ANALOG GND
666
688 +5VDC
A20J3
TO A20 AUXILLIARY SOUND BOARD
AUDIO OUT
A-27942
444 GND
133 VOLUME CONTROL
TO A20 AUX SND BD
A20P5
A5P3
A-28812
TO A5 AUX PWR SUPPLY
A20J1
166 -12VDC REG.
155 +12VDC REG.
888 ANALOG GND
688 +5VDC
9
9
666 SRET
A1J4
A6J1
TO A6 SOUND BOARD
777 MR
300 SD0
311 SD1
322 SD2
333 SD3
344 SD4
355 SD5
366 SD6
377 SD7
TO A1 CONTROL BOARD
A1J3
A8J3
RIBBON
A-28822
TO A1 CONTROL BOARD
TO A8 DISPLAY CNTLR BD
A4J2
A8J4
RIBBON
A-28814
TO A4 DOT MATX DISPLAY
TO A8 DISPLAY CNTLR BD
A1J2
A3J2
RIBBON
A-26779
TO A1 CONTROL BOARD
TO A3 DRIVER BOARD
A6S4
A20P4
RIBBON
A-27936
TO A6 SOUND BOARD
TO A20 AUX SND BD
NOTE: 1. A18J2 (FROM TRANSFORMER PANEL)

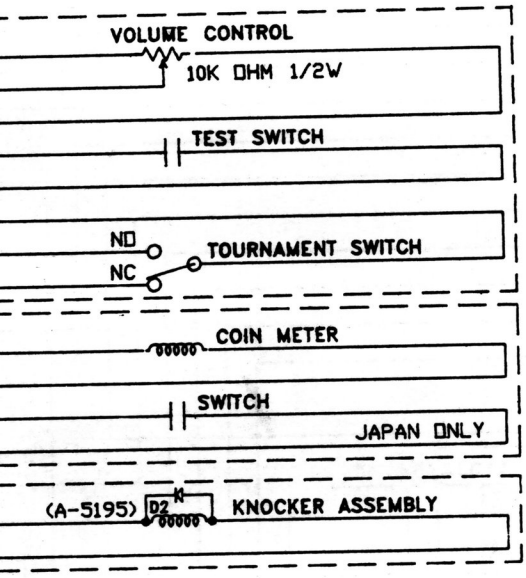

NOTE:
1. AMOUNT OF PARTS VARIES PER GAME.
2. ALL DIODES ARE TYPE IN4004.
3. A18J3 (FROM TRANSFORMER PANEL).

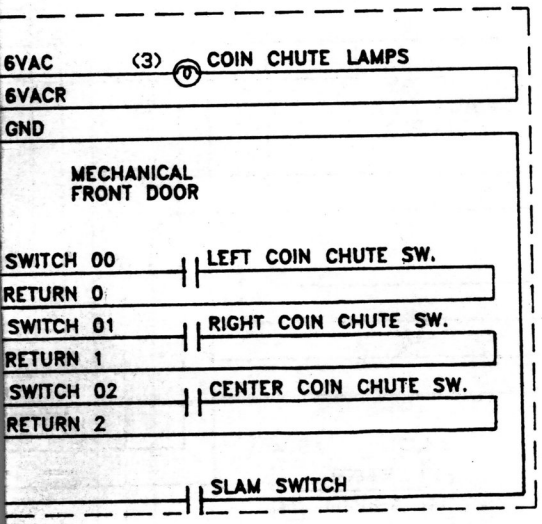

CODE	
5	GREEN
6	BLUE
7	VIOLET
8	GRAY
9	WHITE

Premier Technology			
TITLE: CABINET/FRONT DOOR SCHEMATIC DIAGRAM			
USED ON: #743	DRAWN: RLM	DATE: 10-06-94	30853

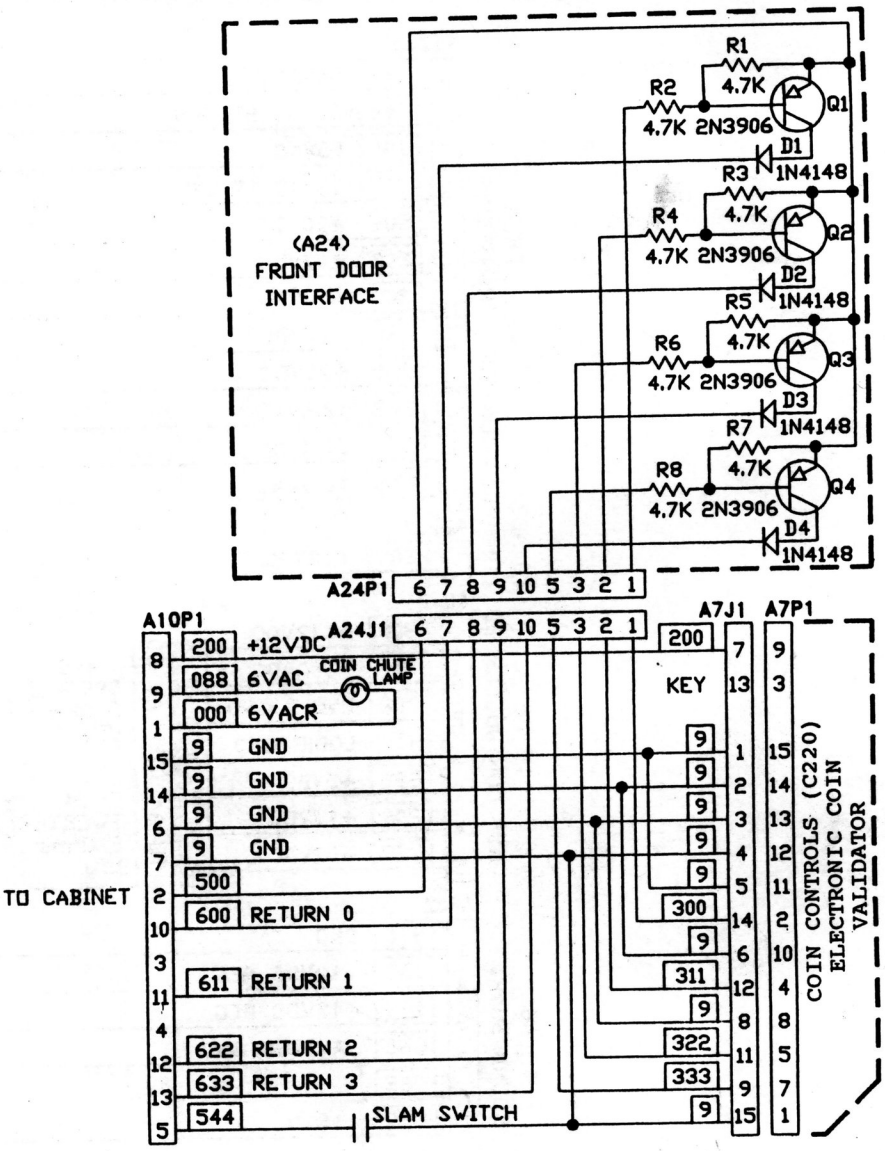

(A24)
FRONT DOOR INTERFACE
COMPONENT LOCATION

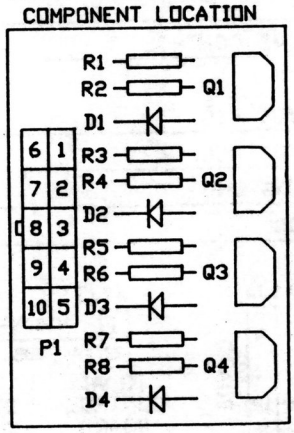

(A24)
FRONT DOOR INTERFACE
PARTS LIST

REFERENCE	DESCRIPTION	PART NO.
	FRONT DOOR INTERFACE ASSEMBLY	MA1645
D1-D4	DIODE, 1N4148	XD-261
Q1-Q4	TRANSISTOR, PNP, 2N3906	XD-588
R1-R8	RESISTOR, 4.7K OHM, 1/4W, 5%	XD-7
A24P1	HEADER,10 POSITION	XD-912
	SPACER (4)	23984

COLOR CODE			
0	BLACK	5	GREEN
1	BROWN	6	BLUE
2	RED	7	VIOLET
3	ORANGE	8	GRAY
4	YELLOW	9	WHITE

Premier Technology			
TITLE: SCHEMATIC DIAGRAM ELECTRONIC FRONT DOOR-4 OUTPUT			
USED ON	DRAWN: RLM	DATE: 09-20-91	28541

VII. PARTS INFORMATION

TABLE OF CONTENTS

PAGE

CABINET PARTS.....64

PLAYBOARD PARTS (SWITCHES).....65

PLAYBOARD PARTS (LAMPS).....66

PLAYBOARD PARTS
(RUBBER RINGS AND MISCELLANEOUS PARTS).....67

FLIPPER PARTS
EXPLODED VIEW.....68

UPKICKER PARTS
EXPLODED VIEW.....69

VARI TARGET ASSEMBLY
ASSEMBLY VIEW.....70

DROP TARGET PARTS
EXPLODED VIEW.....71

LIGHTBOX INSERT
LAMP IDENTIFICATION.....72

BALL HOLE KICKER PARTS
EXPLODED VIEW.....73

SPINNER ASSEMBLY
ASSEMBLY VIEW.....74

BASKET AND BACKBOARD
ASSEMBLY VIEW.....75

UNIQUE PARTS.....76

VII. PARTS INFORMATION

CABINET PARTS

ITEM	DESCRIPTION	PART NO.
1	Cabinet	30520-743
2	Lightbox Mounting Thumb Screw (2)	FA-162
	(Not Shown for Reference Only, Part of Lightbox Assembly)	
3	Butt Hinge (2)	26449
	(Attached to Lightbox)	
4	"U" Bolt (P/O Lightbox)	24659
	Latch Assembly (P/O Cabinet)	21969
5	Line Cord (Domestic)	23365
	Line Cord Cover Plate	23364
6	Speaker, 4 Ohm, 8"	28934
	Speaker Grille	28935
7	Prop Stick, Playfield	23940
8	Right Flipper Switch Assembly	28693
	(Switch with Bracket)	28668
	(Switch Only)	
9	Left Flipper Switch Assembly	28973
	(Switch with Bracket)	28962
	(Switch Only)	26314
10	Ball Shooter Assembly	29106
11	Front Door Assembly (Universal)	MA-1938
	Cable Assembly	26130
	Slam Switch (N/O)	LA-2
	6V DC Lamp, Wedge Base, #555	FD-24
	Lampholder	18092
12	Replay Switch Assembly	28032
13	Cashbox	*SEE NOTE
	Cover	
14	Plumb Bob Tilt Switch Assembly	358
	Strike Plate	30879
	Carbon, Tilt Bob	357
	Rod, Tilt	22043
	Bracket	14653
	Clip	MA-12
15	Knocker Assembly	27591
	5" Bell Assembly (When Used)	3768
16	Cabinet Leg (4), 31"	3775
	Leg Bolt (8)	30121
	1-1/2" Leg Adjuster (4)	FA-665
	3/8-16", Jam Nut (8)	MA-2067
17	Transformer Panel Assembly	EL-42
	Bridge Rectifier (3)	XO-830
	Capacitor, (10,000UF), 25V	XO-957
	Capacitor, (33,000UF), 35V	EL-78
	Fuse Holder and Cap	EL-10
	Fuse Block (8 Pole)	EL-31
	F3, 3/8 Amp, SLO-BLO	EL-31
	F4, 3/8 Amp, SLO-BLO	EL-33
	F5, 4 Amp, SLO-BLO	EL-36
	F6, 10 Amp, SLO-BLO	EL-26
	F7, 8 Amp, SLO-BLO	EL-25
	F8, 15 Amp	EL-23
	F9, 10 Amp	EL-9
	F10, 3 Amp, SLO-BLO	EL-9
	F11, 3 Amp, SLO-BLO	29724
	Transformer	
18	Cabinet Pivot Bracket (Left)	25658
	Cabinet Pivot Bracket (Right)	25657
19	Game Controls Board (A26)	MA-1851
20	Ball Roll Tilt	
	Housing and Switch Assembly	24394
	Switch	24393
21	Right Moulding (Not Shown)	28700
22	Left Moulding (Not Shown)	28701
23	Front Moulding (Not Shown)	16951
24	Relay Strip Assembly	MA-1872
	"Q" Relay	MA-1172
	"T" Relay	MA-25
	"A" Relay	MA-1021
25	Power Module Assembly (110V AC)	MA-1928
	Double Throw Switch	23799
	Fuse Holder And Cap (2)	EL-78
	Line Filter	EL-50
	Power Module Assembly (FRANCE)	30255A
	Power Module Assembly (GERMANY)	30255B
	Power Module Assembly (JAPAN)	30255C
	Power Module Assembly (220V AC)	30255D
	F1, 8 Amp SLO-BLO, 110V AC	EL-26
	4 Amp SLO-BLO, 220V AC	EL-33
	F2, 5 Amp SLO-BLO, 110V AC	EL-8
	2.5 Amp SLO-BLO, 220V AC	EL-21

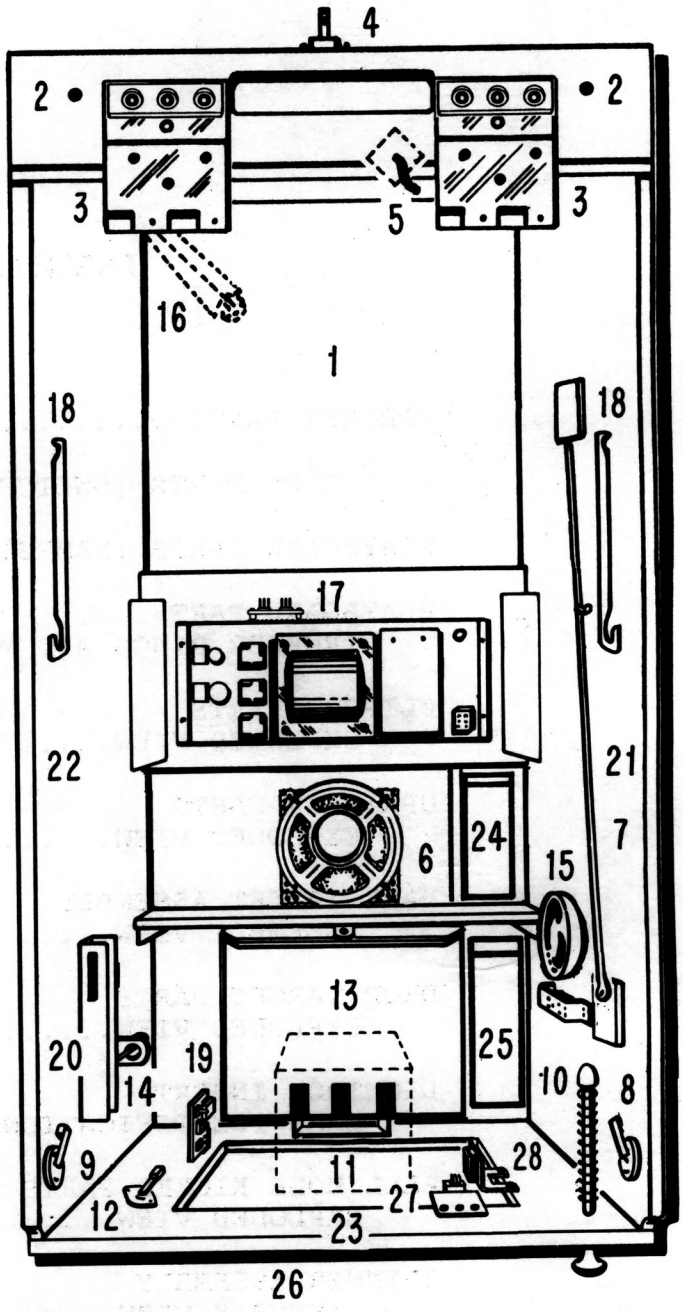

ITEM	DESCRIPTION	PART NO.
26	Lock Bar (Not Shown)	29759
	Lock Bracket (Not Shown)	29760
	Lock Bar Bracket (Not Shown)	29761
27	Front Door Service Switch Assembly	
	Switch Bracket	29451
	Switch	29305
28	Interlock Switch Assembly	
	Switch Bracket	29148
	Switch Cover	29145
	Switch	EL-66
	Insulator	24145

*NOTE:
COVER USED WITH ELECTRONIC DOOR OR 3 CHUTE DOOR, PART NO. 28062

COVER USED WITH 2 CHUTE DOOR WITH $1.00 ACCEPTOR SLOT, PART NO. 30002

VII. PARTS INFORMATION

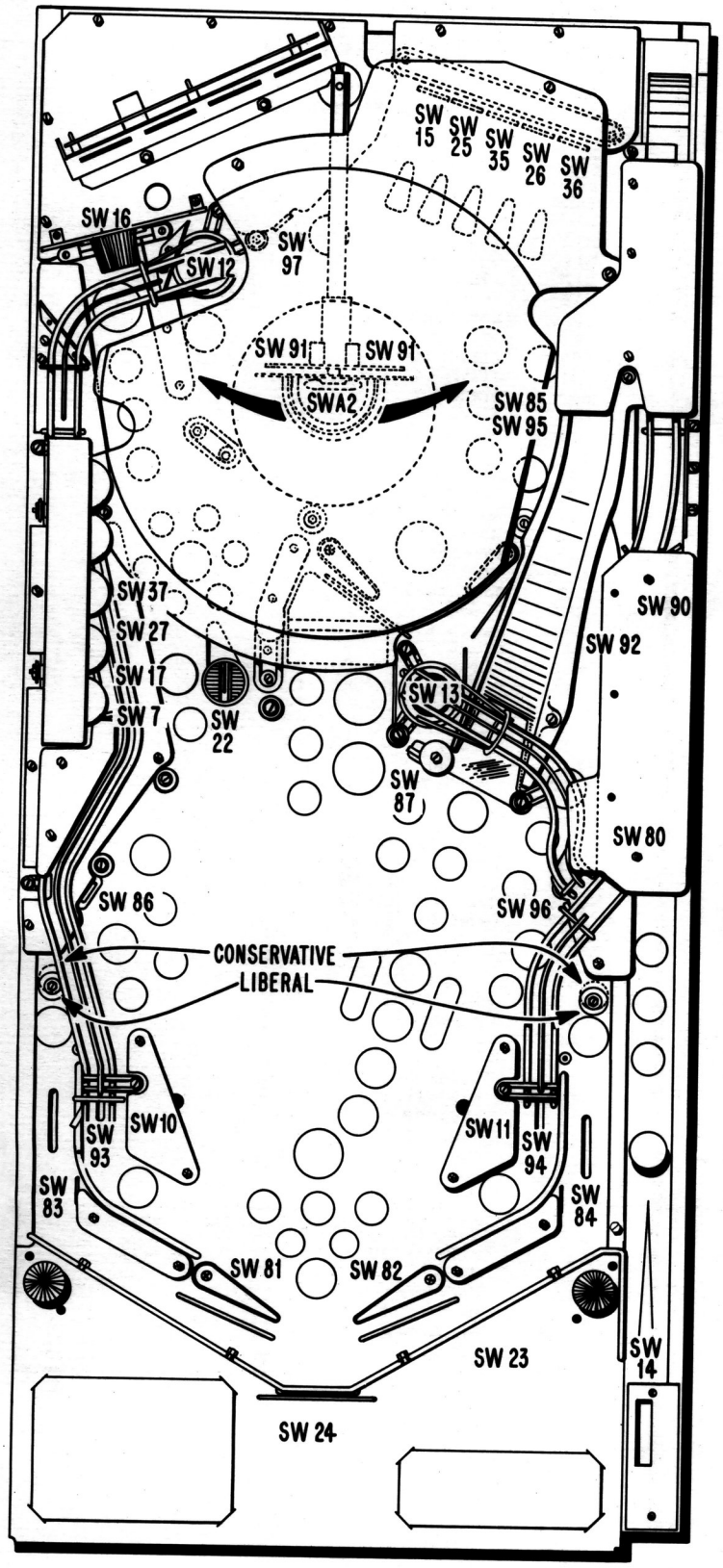

PLAYBOARD SWITCH ASSIGNMENTS

SWITCH MATRIX NUMBER	SWITCH ASSIGNMENT	PART NO.
SW 0	LEFT COIN CHUTE (#1)	P/O FRONT DOOR
SW 1	RIGHT COIN CHUTE (#2)	P/O FRONT DOOR
SW 2	CENTER COIN CHUTE (#3)	P/O FRONT DOOR
SW 3	COIN CHUTE (#4)	P/O ELECTRONIC DOOR
SW 4	START (CREDIT) BUTTON	18092
SW 5	TOURNAMENT	X0-1193
SW 6	FRONT DOOR (SERVICE)	29305
SW 7	VARI TARGET #1, #2	P/O 30917
SW 10	LEFT KICKING RUBBER (2)	27702
SW 11	RIGHT KICKING RUBBER (2)	27702
SW 12	LEFT UPKICKER	27667A
SW 13	RIGHT UPKICKER	27667A
SW 14	SHOOTER LANE ROLLOVER	25824
SW 15	DROP TARGET #1	25896
SW 16	SPINNER	27171
SW 17	VARI TARGET #3, #4	P/O 30917
SW 20	(NOT USED)	
SW 21	(NOT USED)	
SW 22	HOLE KICKER	28078
SW 23	TROUGH	29346
SW 24	OUTHOLE	26927
SW 25	DROP TARGET #2	27306
SW 26	DROP TARGET #4	25897
SW 27	VARI TARGET #5	P/O 30917
SW 30 THRU SW 34	(NOT USED)	
SW 35	DROP TARGET #3	25896
SW 36	DROP TARGET #5	25895
SW 37	VARI TARGET #6	P/O 30917
SW 40 THRU SW 77	(NOT USED)	
SW 80	RIGHT RAMP (LOWER), (OPTICAL INTERFACE)	P/O MA-1558
SW 81	LEFT FLIPPER (SENSOR BOARD)	P/O MA-1334
SW 82	RIGHT FLIPPER (SENSOR BOARD)	P/O MA-1334
*SW 83	LEFT OUTSIDE ROLLOVER	28625
*SW 84	RIGHT OUTSIDE ROLLOVER	28625
*SW 85	TOP RIGHT #1 SPOT TARGET (WHITE)	29099Z
*SW 86	BOTTOM LEFT SPOT TARGET (WHITE)	29099Z
*SW 87	CENTER SPOT TARGET (YELLOW)	29430T
SW 90	RIGHT RAMP (UPPER), (OPTICAL INTERFACE)	P/O MA-1558
*SW 91	BASKET HOOP (2)	30878
*SW 92	RIGHT SIDE ROLLOVER	28625
*SW 93	LEFT RETURN ROLLOVER	28625
*SW 94	RIGHT RETURN ROLLOVER	28625
*SW 95	TOP RIGHT #2 SPOT TARGET (WHITE)	29099Z
*SW 96	BOTTOM RIGHT SPOT TARGET (YELLOW)	29430T
*SW 97	TOP LEFT SPOT TARGET (WHITE)	29099Z
SW A0	(NOT USED)	
SW A1	(NOT USED)	
*SW A2	BACKBOARD	30779
SW A3 THRU SW B7	(NOT USED)	

* SMART SWITCH™

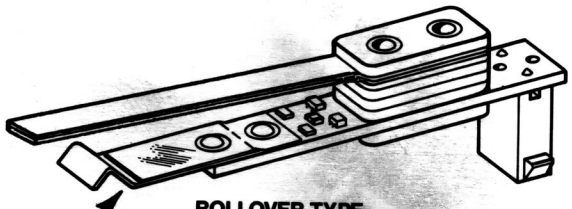

ROLLOVER TYPE
SMART SWITCH™
DO NOT ADJUST WIDE BEAM

SEE PAGE 22

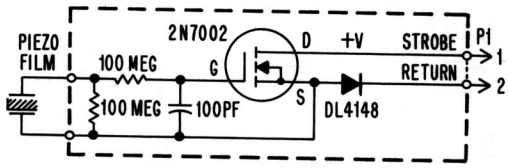

SCHEMATIC REPRESENTATION

VII. PARTS INFORMATION

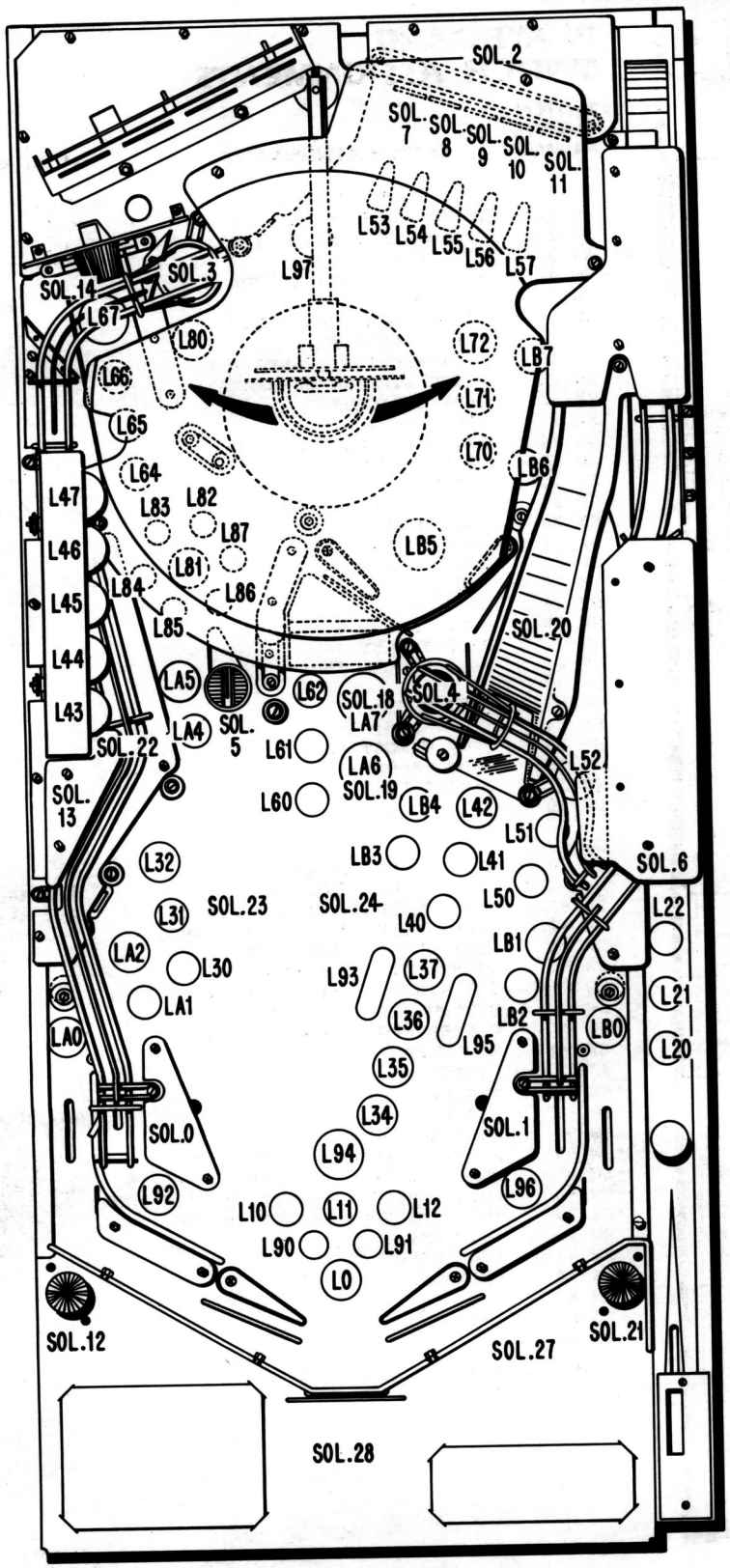

SOLENOID FUNCTIONS/LOCATIONS

SOL. 0 LEFT KICKING RUBBER
SOL. 1 RIGHT KICKING RUBBER
SOL. 2 5 BANK RESET
SOL. 3 TOP UPKICKER
SOL. 4 BOTTOM UPKICKER
SOL. 5 HOLE KICKER
SOL. 6 PLUNGER GATE
SOL. 7 #1 TRIP
SOL. 8 #2 TRIP
SOL. 9 #3 TRIP
SOL. 10 #4 TRIP
SOL. 11 #5 TRIP
SOL. 12 CARDHOLDER, LEFT DOME, #67; *LIGHTBOX, #904, "S" AND CAMERA
SOL. 13 LEFT RAMP DOME, #67
SOL. 14 SPINNER DOME, #67
SOL. 15 LIGHTSTRIP #1, #67; *LIGHTBOX, #904, "H" AND CAMERA
SOL. 16 LIGHTSTRIP #2, #67; *LIGHTBOX, #904, "A" AND CAMERA
SOL. 17 LIGHTSTRIP #3, #67; *LIGHTBOX, #904, "Q" AND CAMERA
SOL. 18 SUPER JACKPOT, #67
SOL. 19 JACKPOT, #67
SOL. 20 RIGHT RAMP, #67 (2)
SOL. 21 CARDHOLDER, RIGHT DOME, #67; *LIGHTBOX, #904, BASKET
SOL. 22 VARI-TARGET RESET
SOL. 23 HOOP MOTOR RELAY (B)
SOL. 24 PLATTER MOTOR RELAY (C)
SOL. 25 LIGHTBOX ILLUM. RELAY (A)
SOL. 26 TICKET/COIN METER ENABLE
SOL. 27 BALL RELEASE
SOL. 28 OUTHOLE
SOL. 29 KNOCKER
SOL. 30 TILT RELAY (T)
SOL. 31 GAME OVER RELAY (Q)

PLAYBOARD LAMP ASSIGNMENTS

LAMP NUMBER	LAMP ASSIGNMENT
L0	"SHOOT AGAIN"
L1	Credit Button
L2	
THRU	(Not Used)
L7	
L10	"3M"
L11	"5M"
L12	"10M"
L13	
THRU	(Not Used)
L17	
L20	"ALLEY OOP"
L21	"EVENT"
L22	"LOCK"
L23	
THRU	(Not Used)
L27	
L30	Basketball
L31	"ADVANCE BONUS"
L32	"BREAK THE BLACKBOARD"
L33	(Not Used)
L34	Horsehead
L35	"MVP" Trophy
L36	Basketball
L37	Clock
L40	Begin Event
L41	Clock
L42	"LIGHT ALLEY OOP"
L43	"HIDDEN FEATURE" #1
L44	"HIDDEN FEATURE" #2
L45	"HIDDEN FEATURE" #3
L46	"HIDDEN FEATURE" #4
L47	"HIDDEN FEATURE" #5
L50	"MVP" Trophy
L51	"2"
L52	"4"
L53	Drop Target #1
L54	Drop Target #2
L55	Drop Target #3
L56	Drop Target #4
L57	Drop Target #5
L60	"2 POINTS"
L61	"3 POINTS"
L62	"ALLEY OOP"
L63	(Not Used)
L64	Basketball
L65	"1"
L66	"3"
L67	"SUPER SPINNER"
L70	"MVP" Trophy
L71	"ADVANCE X"
L72	"REBOUND"
L73	
THRU	(Not Used)
L77	
L80	Horsehead
L81	"SHAQ ATTACK"
L82	"ALLEY OOP"
L83	"REBOUND"
L84	"JACKPOT"
L85	"BONUS 20M"
L86	"GAME BALL"
L87	"LEVEL 3"
L90	"2X"
L91	"3X"
L92	Horsehead
L93	"MULTI-BALL"
L94	"20M"
L95	"FINALS"
L96	Basketball
L97	Basketball
LA0	Drain Shield
LA1	"EXTRA BALL"
LA2	Horsehead
LA3	(Not Used)
LA4	"FREE THROW"
LA5	"MVP" Trophy
LA6	"JACKPOT"
LA7	"SUPER JACKPOT"
LB0	"SPECIAL"
LB1	Clock
LB2	"SPECIAL"
LB3	Clock
LB4	"DRIBBLE"
LB5	"5"
LB6	"SPELL SHAQUILLE"
LB7	Clock

LAMP SOCKETS WITH DIODE BOARD	
TYPE	PART NO.
1-1/8" BRACKET	26621
1/2" BRACKET	26622
LAYDOWN	26623

NOTE:
*LAMPS MOUNTED ON LIGHTBOX INSERT, SEE PAGE 72 FOR LOCATION.

VII. PARTS INFORMATION

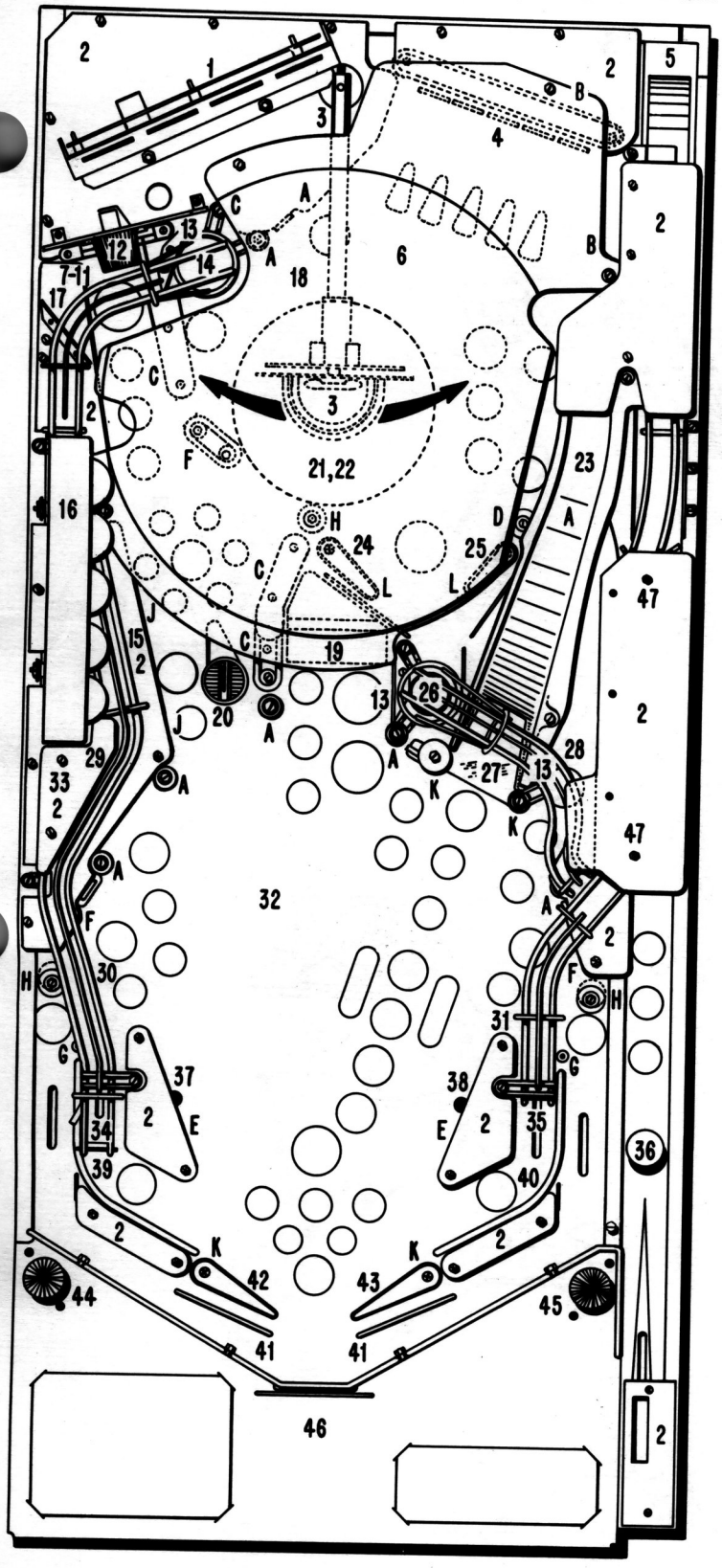

PLAYBOARD PARTS INFORMATION

PARTS LIST

ITEM	DESCRIPTION	PART NO.
1	12 DIGIT DISPLAY AND BRACKET	MA-2075
2	PLASTIC SHIELD SET	31049
3	BASKET AND BACKBOARD ASSEMBLY (SEE ASSEMBLY ILLUSTRATION)	30778
4	TARGET BANK ASSEMBLY, 5 POSITION (SEE EXPLODED VIEW ILLUSTRATION)	MA-1838
4A	DROP TARGET DECAL (5)	30903
5	BALL SCOOP ASSEMBLY	30763
6	VACUUM FORM DOME	30755
7	TARGET SHIELD	14043
8	SWINGING TARGET ASSEMBLY	24494
9	SWITCH ROD	20406
10	NYLON WASHER (2)	20407
11	SPINNER SPACER	27244
12	PLASTIC DOME, 1-1/4", RED	25147U
13	BALL DEFLECTOR (3)	21158
14	UPKICKER ASSEMBLY (SEE EXPLODED VIEW ILLUSTRATION)	MA-1743
15	BALL GUIDE RAIL	17106
16	LIGHT STRIP ASSEMBLY	30786
17	BALL DEFLECTOR	25594
18	MYLAR OVERLAY (UPPER)	31038
19	BALL RAMP	30769
20	BALL HOLE KICKER (SEE EXPLODED VIEW ILLUSTRATION)	MA-1985
21	SPINNING DISC MAT	31070
22	SPINNER AND MOTOR ASSEMBLY (SEE ASSEMBLY ILLUSTRATION)	26048
23	RAMP, DECALS AND SPACERS ASSEMBLY	31080
24	TOP LEFT FLIPPER ASSEMBLY (SEE EXPLODED VIEW ILLUSTRATION)	MA-1790A
	COIL AND DIODE ASSEMBLY	26646
	FLIPPER SWITCH ASSEMBLY	26439
25	TOP RIGHT FLIPPER ASSEMBLY	MA-1791A
	COIL AND DIODE ASSEMBLY	26646
	FLIPPER SWITCH ASSEMBLY	26438
26	UPKICKER ASSEMBLY (SEE EXPLODED VIEW ILLUSTRATION)	MA-1789
27	RAMP FLAP	30781
28	WIREFORM RAMP	30753
29	VARI TARGET ASSEMBLY (SEE ASSEMBLY ILLUSTRATION)	30971
30	WIREFORM RAMP	30754
31	WIREFORM RAMP	30752
32	MYLAR OVERLAY (LOWER)	31037
33	PLASTIC DOME, 1-1/4", AMBER	25147N
34	CELLULAR BUMPER	29974
35	CELLULAR BUMPER	28274
36	STEEL BALL, 1-1/16" DIAMETER	21864
37	KICKER ASSEMBLY	MA-1083
38	KICKER ASSEMBLY	MA-1373
39	BALL GUIDE RAIL	27916
40	BALL GUIDE RAIL	27915
41	SNUBBER RAIL (2)	13798
42	BOTTOM LEFT FLIPPER ASSEMBLY (SEE EXPLODED VIEW ILLUSTRATION)	MA-1790E
	COIL AND DIODE ASSEMBLY	29876
	FLIPPER SWITCH ASSEMBLY	26439
43	BOTTOM RIGHT FLIPPER ASSEMBLY	MA-1791E
	COIL AND DIODE ASSEMBLY	29876
	FLIPPER SWITCH ASSEMBLY	26438
44	PLASTIC DOME, 1-1/4", WHITE	25147Z
45	PLASTIC DOME, 1-1/4", YELLOW	25147T
46	CARDHOLDER ASSEMBLY	30894
47	OPTO SWITCH AND BRACKET ASSEMBLY (2)	30893

RUBBER RINGS

ITEM	DESCRIPTION	PART NO.
A	BUMPER, TAPERED (BLK)	30003Y
B	3"	10223
C	1"	10219
D	1-1/2"	10220
E	2-1/2"	10222
F	3/4"	10218
G	MINI-POST, SMALL	14793
H	5/16"	10217
J	2"	10221
K	BUMPER, (BLK)	26648Y

MISCELLANEOUS PARTS

DESCRIPTION	PART NO.
RUBBER GROMMET	5240
HAIRPIN CLIP	6947
MINI-POST SCREW	14792
HEX POST WITH GRIP	26531
PLASTIC RIVET	MP-10
PLASTIC POST, 1" (RED)	11561U
PLASTIC POST, 1-3/16" (RED)	11562U
PLASTIC POST (RED)	20635U

ITEM	DESCRIPTION	PART NO.
	FLIPPER ASSEMBLY, LEFT SIDE (ILLUSTRATED)	MA-1790C, MA-1790E
	FLIPPER ASSEMBLY, RIGHT SIDE	MA-1791C, MA-1791E
1	8-32 X 1/2" OVAL HEAD MS	FA-77
2	FLAT RUBBER RING, RED OR BLACK	13151 OR 28546
3	FLIPPER	25972Y
4	FLIPPER SHAFT ASSEMBLY	26497
5	10-32 X 3/8" UNBRAKO (3)	FA-90
6	FLIPPER SHAFT BEARING	25961
7	FRAME, LEFT SIDE (ILLUSTRATED)	29158
	FRAME, RIGHT SIDE	29157
8	SWITCH ASSEMBLY, LEFT SIDE (ILLUSTRATED)	26439
	SWITCH ASSEMBLY, RIGHT SIDE	26438
	CAPACITOR, 2.2UF, 200V	XO-995
9	SWITCH COVER	465
10	5-40 X 3/4" RHMS SEMS (2)	FA-3
11	8-32 X 3/8" HWHMS SEMS (7)	FA-69
12	STOP STUD AND BRACKET ASSEMBLY	29154
13	SLIP-IN CORE	5065
14	COIL WITH DIODE (SEE SCHEMATIC DIAGRAM)	-----
15	SPRING WASHER	FA-605
16	COIL MOUNTING BRACKET	16356
17	LINK AND PLUNGER ASSEMBLY	25956
18	FLIPPER SPRING	3232
19	RETAINING RING	FA-682
20	FLIPPER LEVER ASSEMBLY, LEFT SIDE (ILLUSTRATED)	26014
	FLIPPER LEVER ASSEMBLY, RIGHT SIDE	26013
21	BRACKET	17184
22	#10 SPLIT LOCKWASHER (3)	FA-634

REPAIR NOTE:
BEFORE INSERTING ITEM 1,
PLACE ONE DROP OF SAF-T-LOK
T70 THREAD LOCKING COMPOUND
INTO THE THREADED HOLE OF ITEM 4.

NOTE:
ITEMS 1 THRU 4 ARE NOT PART
OF THE FLIPPER ASSEMBLY.

PARTS DIFFERENCES
FLIPPER ASSEMBLY MA-1791B

ITEM	DESCRIPTION	PART NO.
1	6-32 X 1" PHILLIPS	FA-51
2	RUBBER RING, RED	13149
3	FLIPPER	11241
4	FLIPPER SHAFT ASSY.	29942

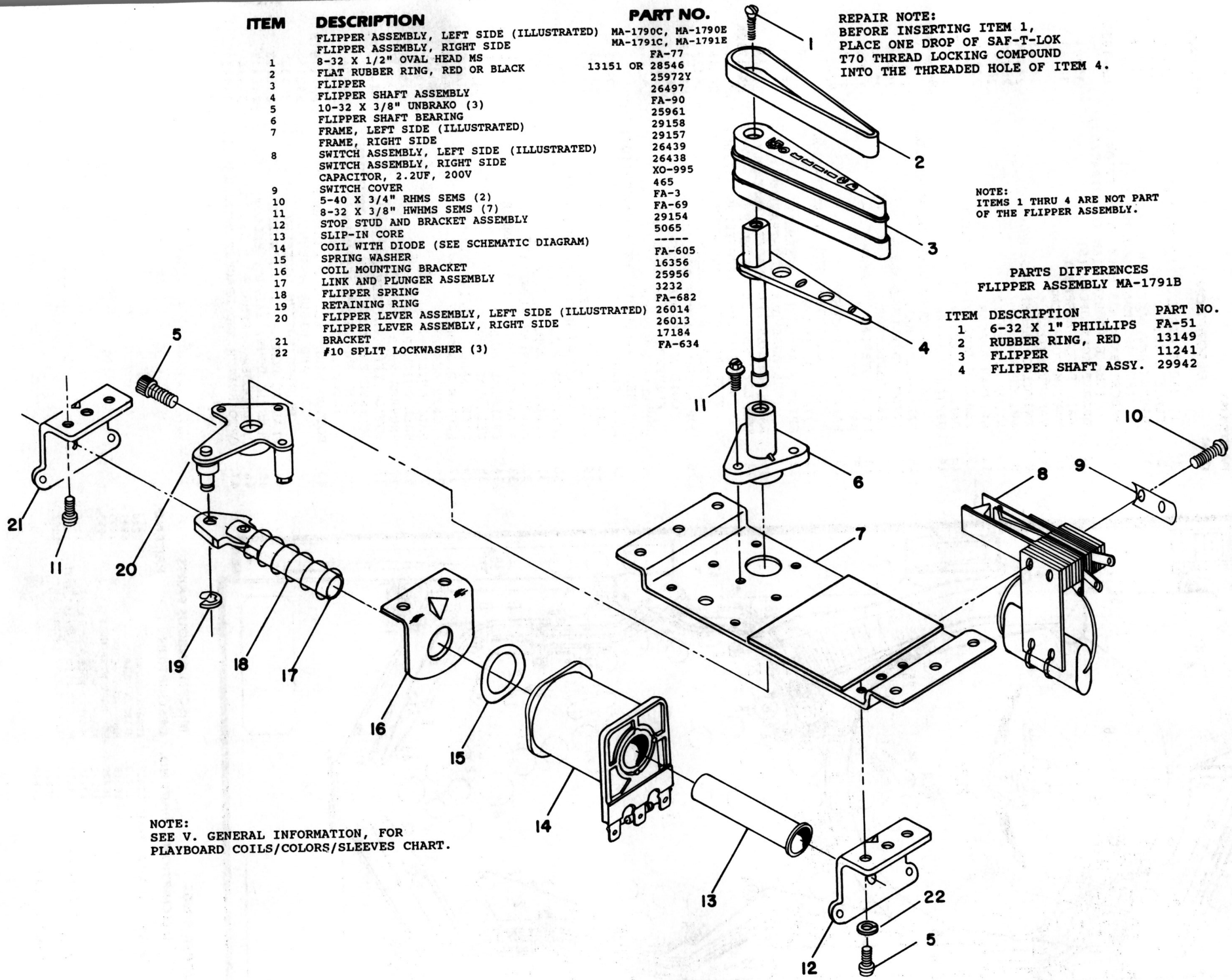

NOTE:
SEE V. GENERAL INFORMATION, FOR
PLAYBOARD COILS/COLORS/SLEEVES CHART.

VII. PARTS INFORMATION

UPKICKER PARTS

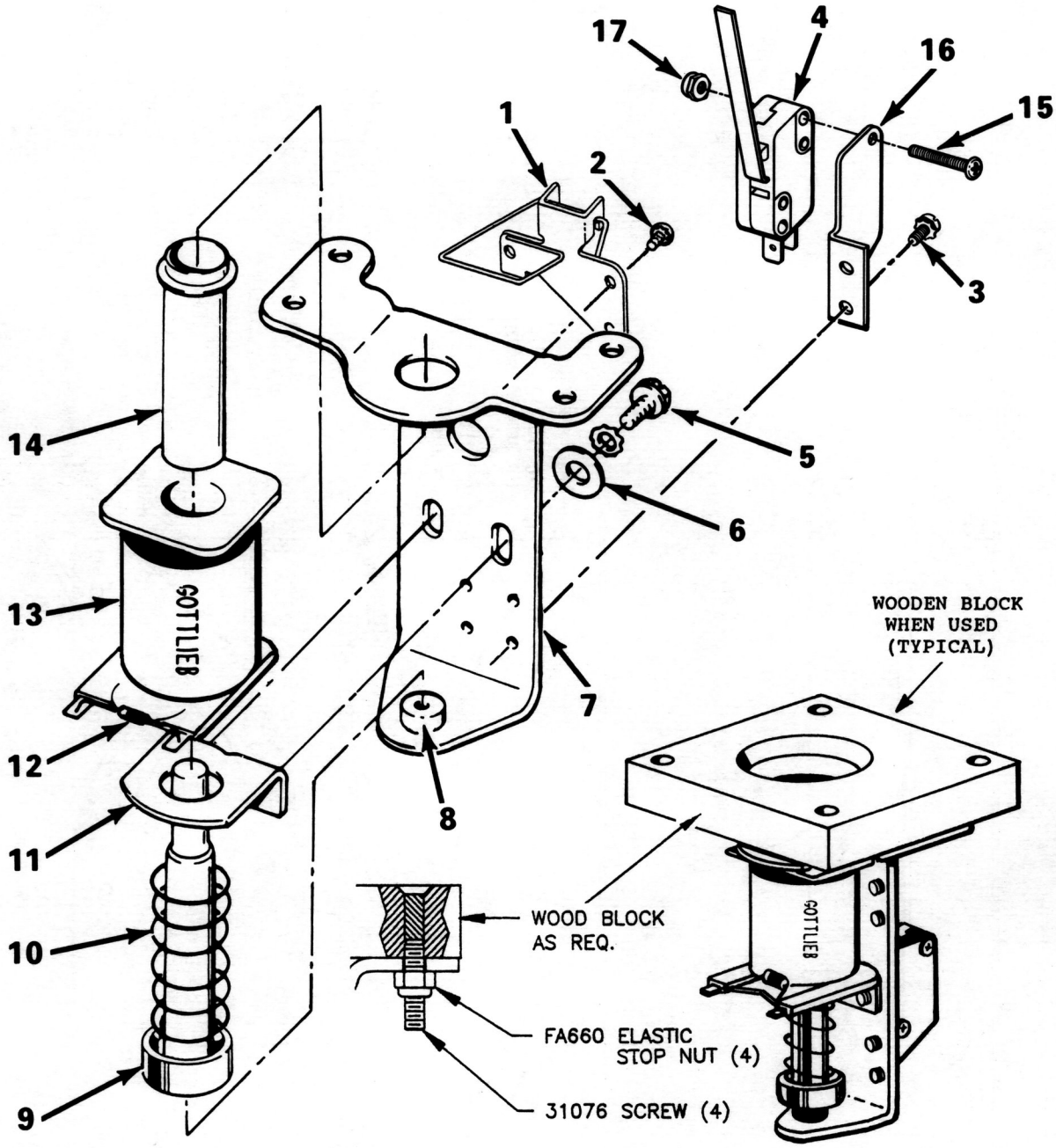

ITEM	DESCRIPTION	PART NO.
	UPKICKER ASSEMBLIES WITH ASSOCIATED COILS	MA-1743, 16570 COIL MA-1747, 26450 COIL MA-1789, 17876 COIL
1	WIREFORM AND BRACKET	28953
2	RHMS-SEMS 6-32 X 3/16" (3)	FA-30
3	RHMS 5-40 X 1/4" SEMS (2)	FA-10
4	MICROSWITCH WITH ACTUATOR	27667A
5	HWHMS-SEMS 8-32 X 5/16"(2)	FA-67
6	#8 WASHER (2)	FA-617
7	FRAME	21416
8	RUBBER GROMMET	5240
9	PLUNGER AND TIP ASSEMBLY	21412
10	SPRING	26739
11	COIL MOUNTING BRACKET	15409
12	DIODE, 1N4004	XO-254
13	COIL	(SEE SCHEMATIC)
14	SLIP-IN-CORE	21411
15	PAN HEAD 4-40 X 5/8"(2)	FA-107
16	MICROSWITCH MOUNTING BRACKET	27870
17	ELASTIC STOP NUT, 4-40 (2)	FA-648

VII. PARTS INFORMATION
VARI TARGET ASSEMBLY, 30917

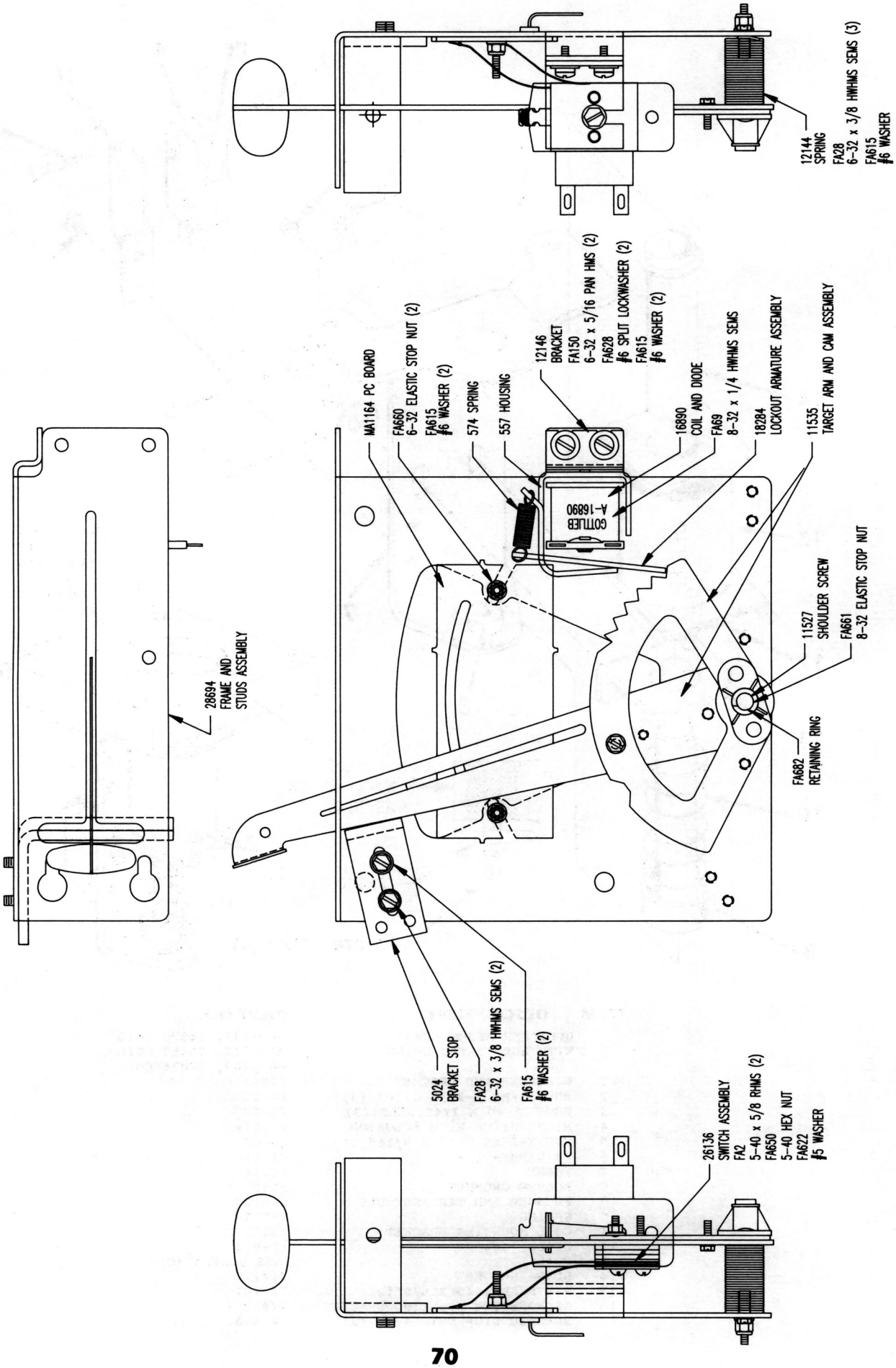

Patent Number: 4,804,186

DROP TARGETS	WITHOUT TRIP COIL				WITH TRIP COIL	
	ITEM 14 COIL PLATE	ITEM 18 GUIDE PLATE	ITEM 22 RESET ARM	ITEM 30 SWITCH PLATE	ITEM 48 COIL PLATE	ITEM 51 GUIDE PLATE
1	25618-1	25621-1	25615-2	25617-1		
1 WITH TRIP COIL		25621-1	25615-2	25617-1	25619-1	25623-1
2	25618-2	25621-2 2 USED	25615-2	25617-2		
2 WITH TRIP COIL		25621-2	25615-2	25617-2	25619-2	25623-2
3	25618-3	25621-3 2 USED	25615-3	25617-3		
3 WITH TRIP COIL		25621-3	25615-3	25617-3	25619-3	25623-3
4	25618-4	25621-4 2 USED	25615-4	25617-4		
4 WITH TRIP COIL		25621-4	25615-4	21617-4	25619-4	25623-4
5	25618-5	25621-5 2 USED	25615-5	25617-5		
5 WITH TRIP COIL		25621-5	25615-5	25617-5	25619-5	25623-5
6	26518-6	25621-6 2 USED	25615-3 2 USED	25617-6		
6 WITH TRIP COIL		25621-6	25615-3 2 USED	25617-6	25619-6	25623-6
7	25618-7	25621-7 2 USED	25615-3 25615-4	25617-7		
7 WITH TRIP COIL		25621-7	25615-3 25615-4	25617-7	25619-7	25623-7
8	25618-8	25621-8 2 USED	25615-4 2 USED	25617-8		
8 WITH TRIP COIL		25621-8	25615-4 2 USED	25617-8	25619-8	25623-8

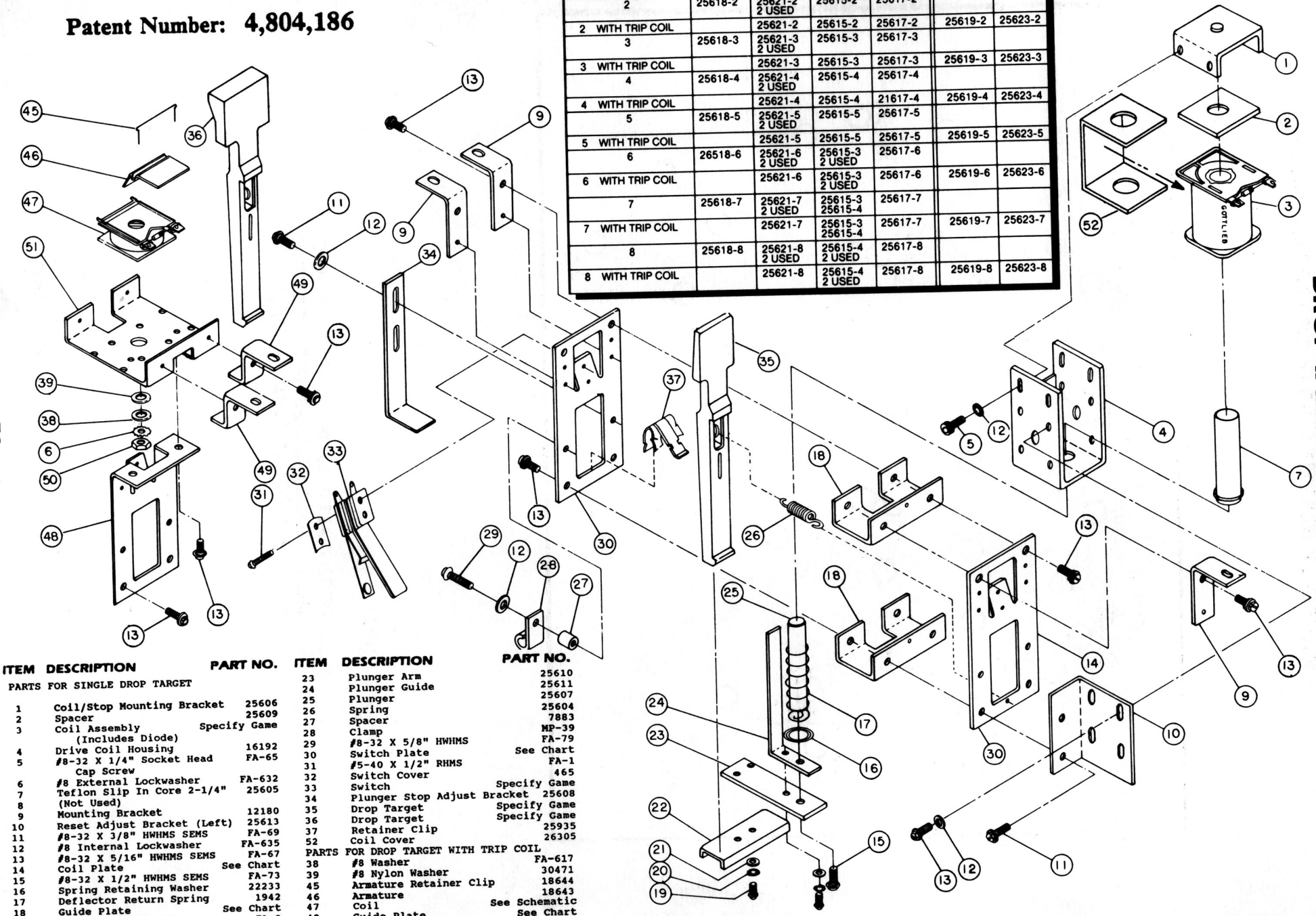

ITEM	DESCRIPTION	PART NO.
	PARTS FOR SINGLE DROP TARGET	
1	Coil/Stop Mounting Bracket	25606
2	Spacer	25609
3	Coil Assembly (Includes Diode)	Specify Game
4	Drive Coil Housing	16192
5	#8-32 X 1/4" Socket Head Cap Screw	FA-65
6	#8 External Lockwasher	FA-632
7	Teflon Slip In Core 2-1/4"	25605
8	(Not Used)	
9	Mounting Bracket	12180
10	Reset Adjust Bracket (Left)	25613
11	#8-32 X 3/8" HWHMS SEMS	FA-69
12	#8 Internal Lockwasher	FA-635
13	#8-32 X 5/16" HWHMS SEMS	FA-67
14	Coil Plate	See Chart
15	#8-32 X 1/2" HWHMS SEMS	FA-73
16	Spring Retaining Washer	22233
17	Deflector Return Spring	1942
18	Guide Plate	See Chart
19	#5-40 X 1/4" RHMS	FA-8
20	#5 External Lockwasher	FA-630
21	#5 Washer	FA-622
22	Reset Arm	See Chart

ITEM	DESCRIPTION	PART NO.
23	Plunger Arm	25610
24	Plunger Guide	25611
25	Plunger	25607
26	Spring	25604
27	Spacer	7883
28	Clamp	MP-39
29	#8-32 X 5/8" HWHMS	FA-79
30	Switch Plate	See Chart
31	#5-40 X 1/2" RHMS	FA-1
32	Switch Cover	465
33	Switch	Specify Game
34	Plunger Stop Adjust Bracket	25608
35	Drop Target	Specify Game
36	Drop Target	Specify Game
37	Retainer Clip	25935
52	Coil Cover	26305
	PARTS FOR DROP TARGET WITH TRIP COIL	
38	#8 Washer	FA-617
39	#8 Nylon Washer	30471
45	Armature Retainer Clip	18644
46	Armature	18643
47	Coil	See Schematic
48	Guide Plate	See Chart
49	Mounting Bracket (Formed)	25612
50	#8-32 Hex Nut	FA-652
51	Coil Plate	See Chart

VII. PARTS INFORMATION

LIGHTBOX INSERT LAMP IDENTIFICATION

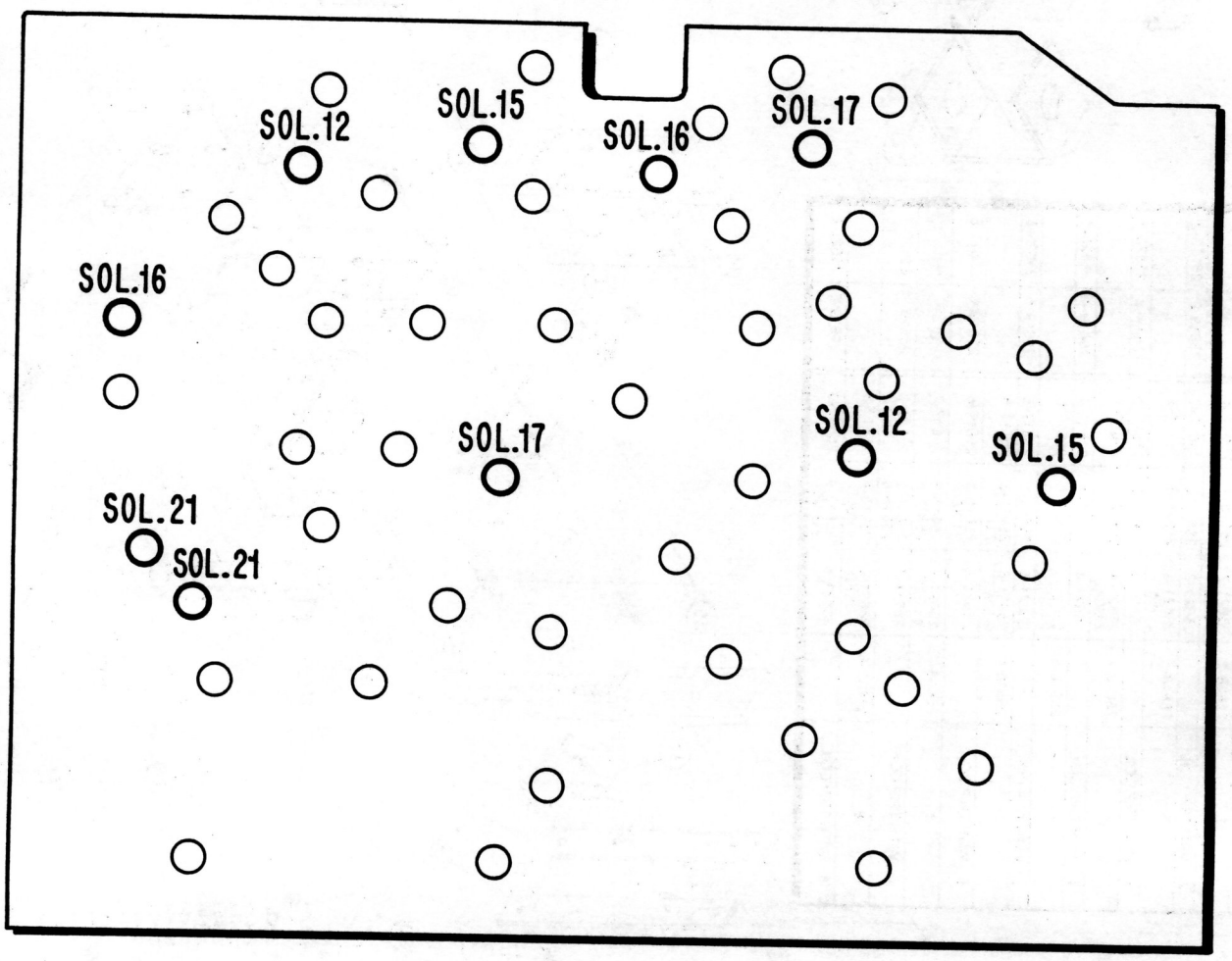

NOTE:

1. DESIGNATED LAMPS ARE TYPE #904 WEDGE BASE, LAMPS NOT DESIGNATED ARE GENERAL ILLUMINATION, TYPE #555 WEDGE BASE.

VII. PARTS INFORMATION

BALL HOLE KICKER PARTS

ITEM	DESCRIPTION	PART NO.
1	6 x 1/2" HWHSMS (2)	FA-270
2	Ball Snubber	16038
3	Metal Hole Liner	11151
4	Hole Base Plate (Specify Color)	15707
5	Hole Switch Arm (Specify Color)	15708
6	Ball Cam (See Tables)	
7	Nylon Washer	6443
8	Spring Cam (See Tables)	
9	Spring (See Tables)	
10	Fulcrum	15819
11	E-Ring (3)	FA-682
12	Link and Plunger Assy.	22234
13	Spring Retaining Washer	22233
14	Spring	1636
15	Mounting Bracket	15409
16	Coil with Diode (Specify Game)	
17	Coil Sleeve	5064
18	Coil Stop and Mounting Bracket	20597
19	#8 Washer (2)	FA-617
20	8-32 x 5/16" HWHMS SEMS (2)	FA-67
21	Ball Snubber	21532
22	Ball Snubber	29762
23	Ball Snubber	29763
24	Spring Cam (15° Offset) (See Tables)	18993
24A	Spring Cam (Dotted Lines) (Opposite Tab) (See Tables)	27865

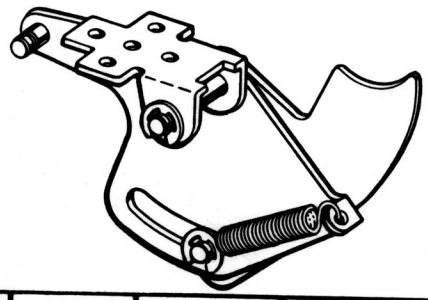

ASSEMBLY WITH FULCRUM	BALL CAM	SPRING CAM (NO SPRING)	SPRING	SPRING SOLID HEIGHT
A-15827	A-15822	A-15826	A-9758	5/8"
A-15828	A-15822	A-15826	A-15598	11/16"
A-16083	A-15822	A-15826	A-8727	7/8"
A-25842	A-15822	A-18993	A-15598	11/16"

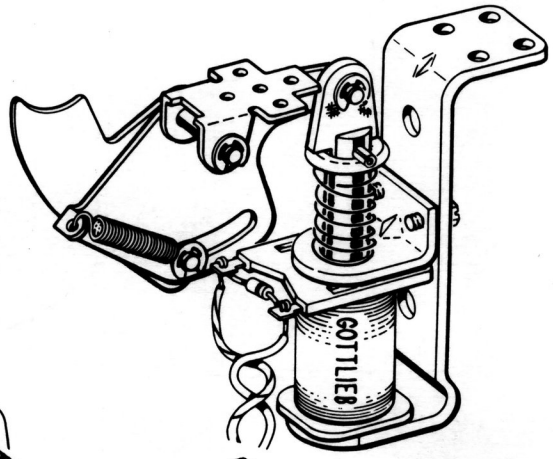

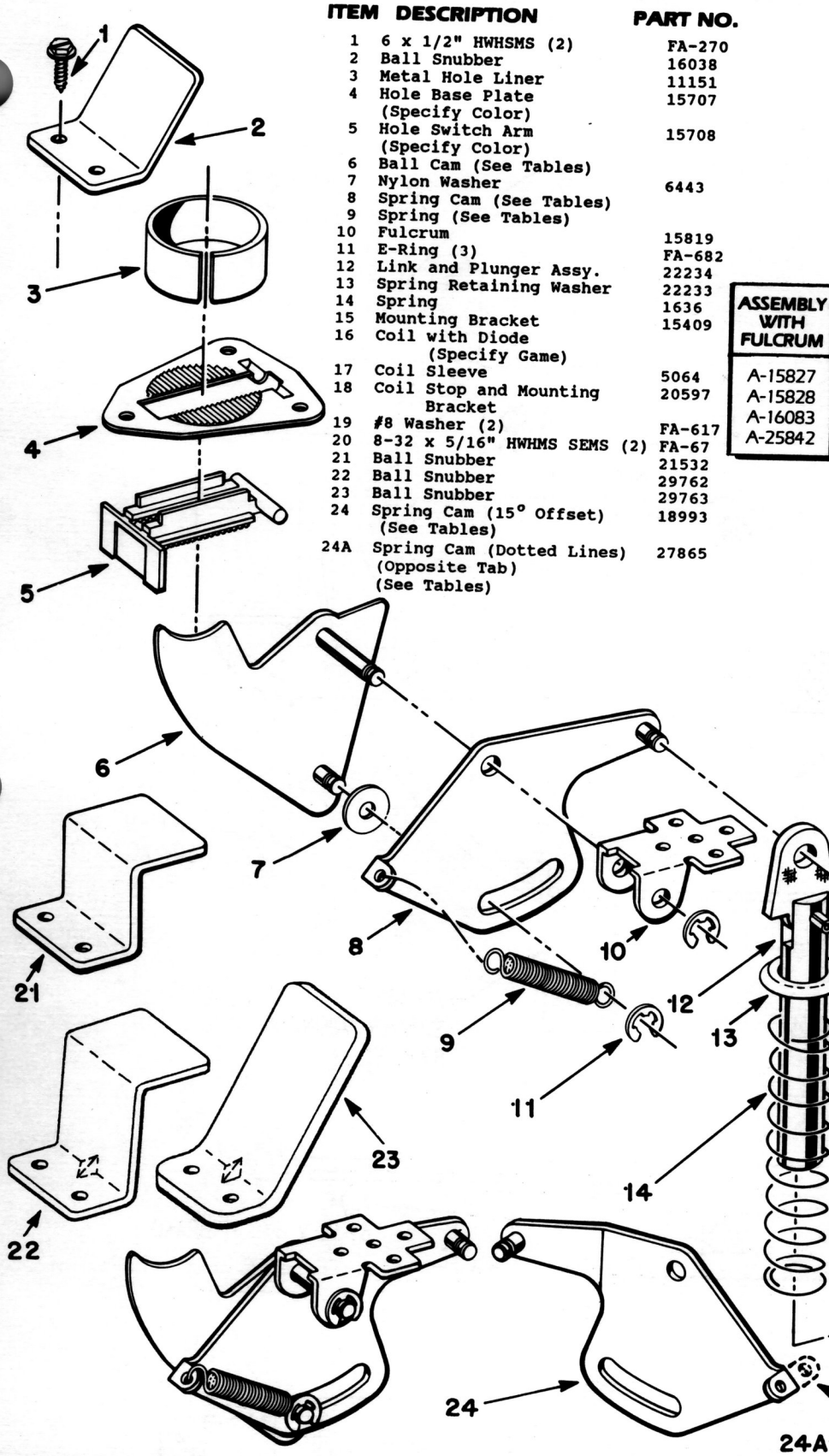

ASSEMBLY WITH FULCRUM	BALL CAM	SPRING CAM (NO SPRING)	SPRING	SPRING SOLID HEIGHT
A-16045	A-16044	A-16043	A-9758	5/8"
A-16085	A-16044	A-16043	A-8727	7/8"
A-16086	A-16044	A-16043	A-15598	11/16"
A-27866	A-15822	A-27865	A-9758	5/8"

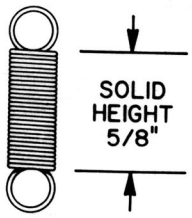

VII. PARTS INFORMATION
SPINNER ASSEMBLY, 26048

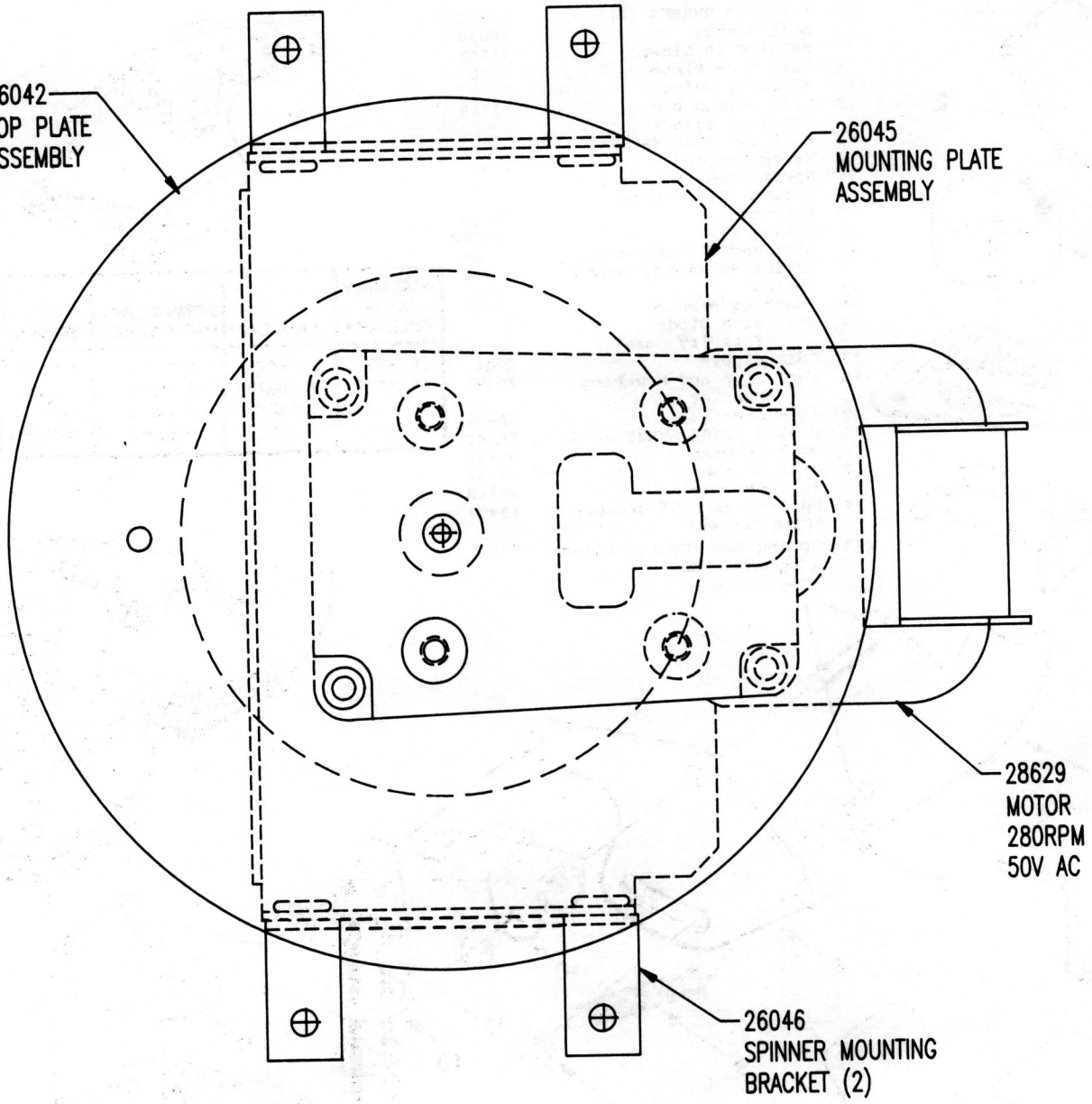

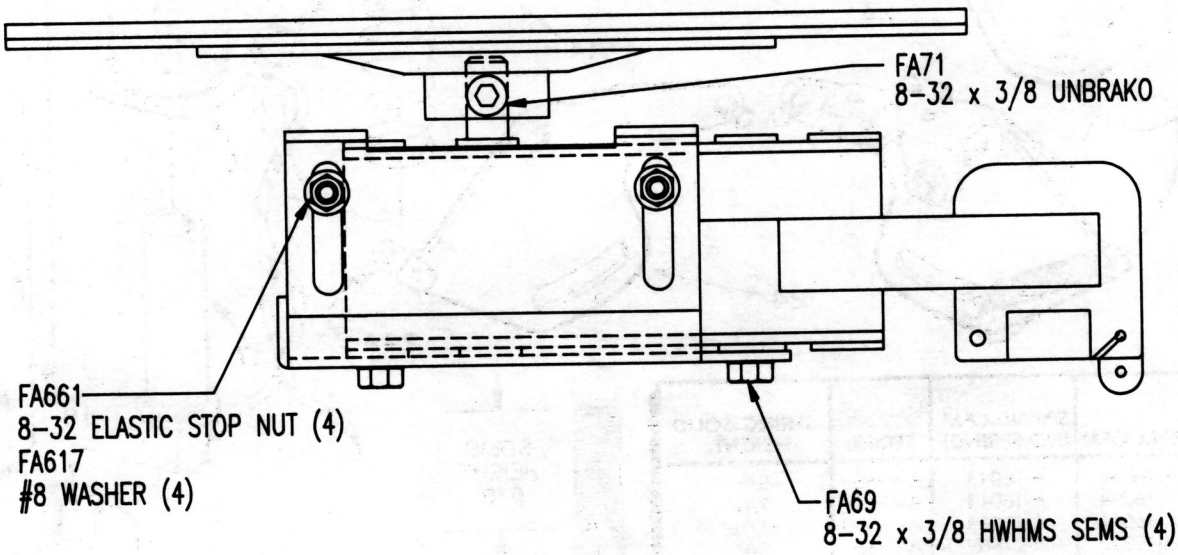

VII. PARTS INFORMATION

BASKET AND BACKBOARD ASSEMBLY, 30778

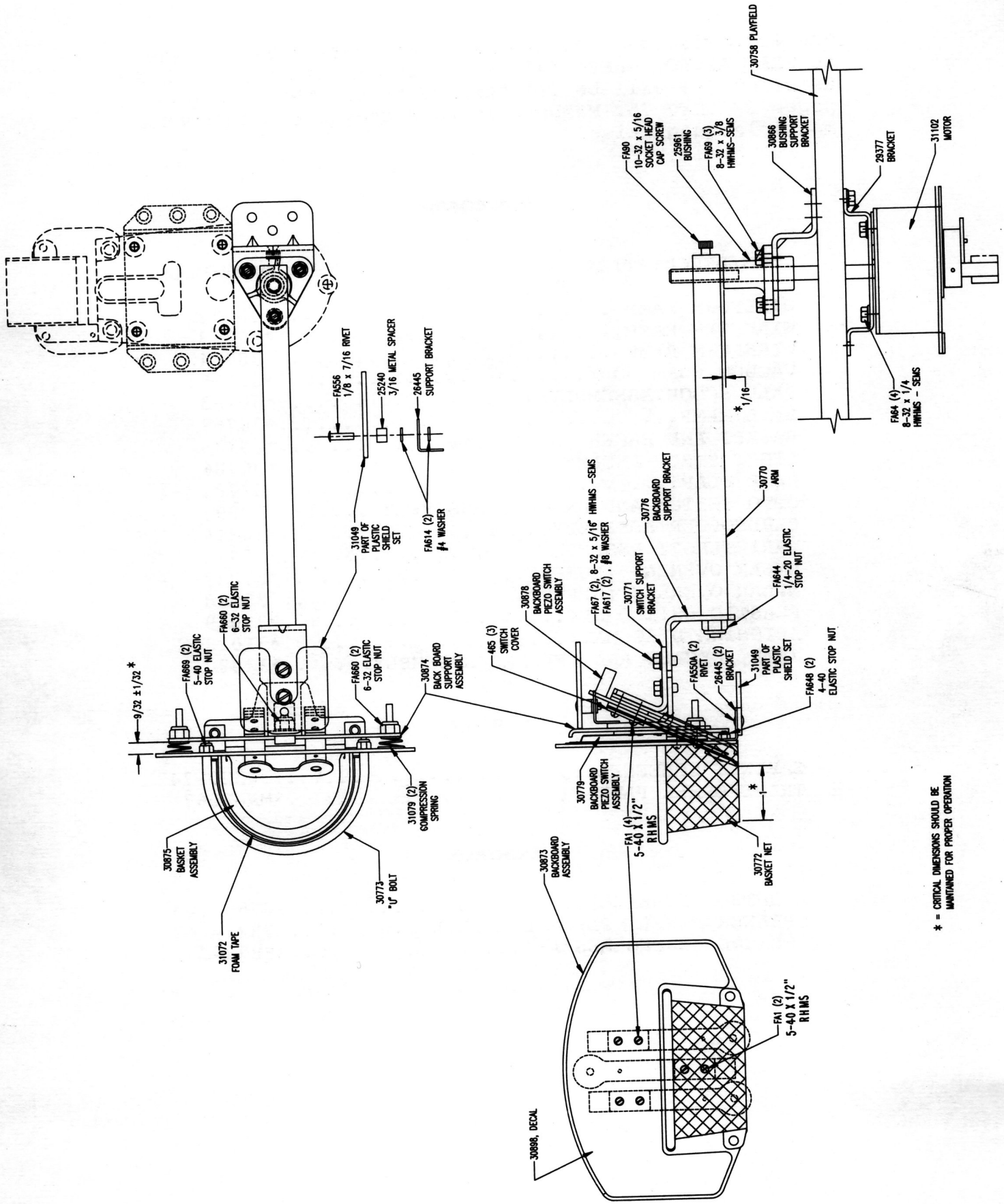
30758 PLAYFIELD
FA90 10-32 x 5/16 SOCKET HEAD CAP SCREW
25961 BUSHING
FA89 (3) 8-32 x 3/8 HWHMS-SEMS
30866 BUSHING SUPPORT BRACKET
29377 BRACKET
31102 MOTOR
FA64 (4) 8-32 x 1/4 HWHMS - SEMS
*1/16
FA556 1/8 x 7/16 RIVET
25240 3/16 METAL SPACER
26445 SUPPORT BRACKET
31049 PART OF PLASTIC SHIELD SET
FA614 (2) #4 WASHER
30770 ARM
30776 BACKBOARD SUPPORT BRACKET
FA67 (2), 8-32 x 5/16" HWHMS -SEMS
FA617 (2), #8 WASHER
30771 SWITCH SUPPORT BRACKET
FA644 1/4-20 ELASTIC STOP NUT
30878 BACKBOARD PIEZO SWITCH ASSEMBLY
465 (3) SWITCH COVER
FA660 (2) 6-32 ELASTIC STOP NUT
FA669 (2) 5-40 ELASTIC STOP NUT
9/32 ±1/32*
30874 BACK BOARD SUPPORT ASSEMBLY
FA550A (2) RIVET
26445 (2) BRACKET
31049 PART OF PLASTIC SHIELD SET
FA648 (2) 4-40 ELASTIC STOP NUT
31079 (2) COMPRESSION SPRING
30779 BACKBOARD PIEZO SWITCH ASSEMBLY
FA1 (4) 5-40 X 1/2" RH MS
30772 BASKET NET
30875 BASKET ASSEMBLY
30773 "U" BOLT
31072 FOAM TAPE
30873 BACKBOARD ASSEMBLY
FA1 (2) 5-40 X 1/2" RH MS
30898, DECAL
* = CRITICAL DIMENSIONS SHOULD BE MAINTAINED FOR PROPER OPERATION

VII. PARTS INFORMATION

UNIQUE PARTS

The following denotes new parts and assemblies unique to SHAQ ATTAQ, GAME #743. Part numbers prefixed with an asterisk (*) will be illustrated or can be located on pages 28 thru 75. Numbers in parenthesis ( ) indicates multiple quantities.

PLAYBOARD

ITEM/DESCRIPTION	PART NO.
WIREFORM RAMP	*30752
WIREFORM RAMP	*30753
WIREFORM RAMP	*30754
VACUUM FORM DOME	*30755
BALL SCOOP ASSEMBLY	*30763
BALL RAMP	*30769
BASKET AND BACKBOARD ASSEMBLY	*30778
LIGHT STRIP ASSEMBLY	*30786
RAMP FLAP	*30781
OPTO SWITCH AND BRACKET ASSEMBLY	*30893
CARDHOLDER ASSEMBLY	*30894
VARI TARGET ASSEMBLY	*30971
MYLAR OVERLAY (LOWER)	*31037
MYLAR OVERLAY (UPPER)	*31038
PLASTIC SHIELD SET	*31049
SPINNING DISC MAT	*31070
RAMP, DECALS AND SPACERS ASSEMBLY	*31080

CABINET

CABINET SCREENED	*30520-743
TRANSFORMER PANEL	*MA-2067

LIGHTBOX

LIGHTBOX SCREENED	28750-743
SPEAKER PANEL, PLEXI SCREENED	28827-743
STYRENE (BACKGLASS ART)	28833-743

BASIC TROUBLESHOOTING GUIDE

CONDITION	POSSIBLE CAUSE
Game does not power up	* Line fuse (F1) blown * Primary fuse (F2) blown
Game does not power up but general illumination lamps light	* Power supply fuse (F5) blown
SWITCH SHORT message appears in display on power up	* Check for a voltage >0v shorted to switch return number shown in display * Bad Control Board (A1) * Bad Driver Board (A3)
Lightbox illumination lamps do not light	* Fuse (F8) blown
Playfield illumination lamps do not light	* Fuse (F9) blown
All controlled lamps, flash lamps, relays, and switches not working	* Fuse (F6) blown * Bad Driver Board (A3)
All controlled lamps work but some switches do not work	* Bad diode associated with the switch (contact point type switch only)
Some controlled lamps and some switches do not work	* Short circuit on associated strobe line on playfield * Bad Driver Board (A3)
Display not working (blank) but LED on Dot Matrix Controller Board (A8) is flashing	* Display fuse (F3) or (F4) blown * Bad Dot Matrix Display Board (A4) * Bad Display Controller Board (A8)
Display not working and LED on Control Board is flickering rapidly	* Bad Dot Matrix Controller Board (A8) * Bad Control Board (A1)
Display not working and LED on Dot Matrix Controller Board (A8) is glowing bright to dim	* Bad Dot Matrix Controller Board (A8)
A solenoid operated device does not work. (Pop Bumper, Kicker, etc.)	* Associated fuse on playfield is blown * Bad Driver Board (A3)
All flippers and solenoids do not work	* Solenoid fuse (F7) blown
A flipper coil overheats and burns or fuse keeps blowing	* End of stroke switch on flipper unit not opening when the flipper button is held in. * Shorted capacitor on flipper unit
Flipper chatters when flipper button is held in	* Open hold winding (small diameter wire) on flipper coil
No sound or speech	* Bad Auxiliary Power Supply fuse (F10 or F11) * Bad Auxiliary Power Supply Board (A5) * Bad Auxiliary Sound Board (A20) * Bad Sound Board (A6)
Some sounds or speech missing	* Bad Auxiliary Sound Board (A20) * Bad Sound Board (A6)
An optical switch does not work or works intermittently	* Misalignment of LED transmitter to receiver * Bad LED transmitter and/or receiver * Bad Optical Interface Board (A25)

IMPORTANT NOTICE

THIS SHIPMENT HAS BEEN CAREFULLY INSPECTED AND PROPERLY PACKED BEFORE LEAVING THE FACTORY.

WE CANNOT ASSUME RESPONSIBILITY FOR BREAKAGE THAT MAY OCCUR IN TRANSPORTATION. IF THIS SHIPMENT IS DAMAGED IN ANY WAY, IMMEDIATELY NOTIFY THE CARRIER AND FILE DAMAGE REPORT SO THAT A SATISFACTORY ADJUSTMENT CAN BE MADE BY THEM.

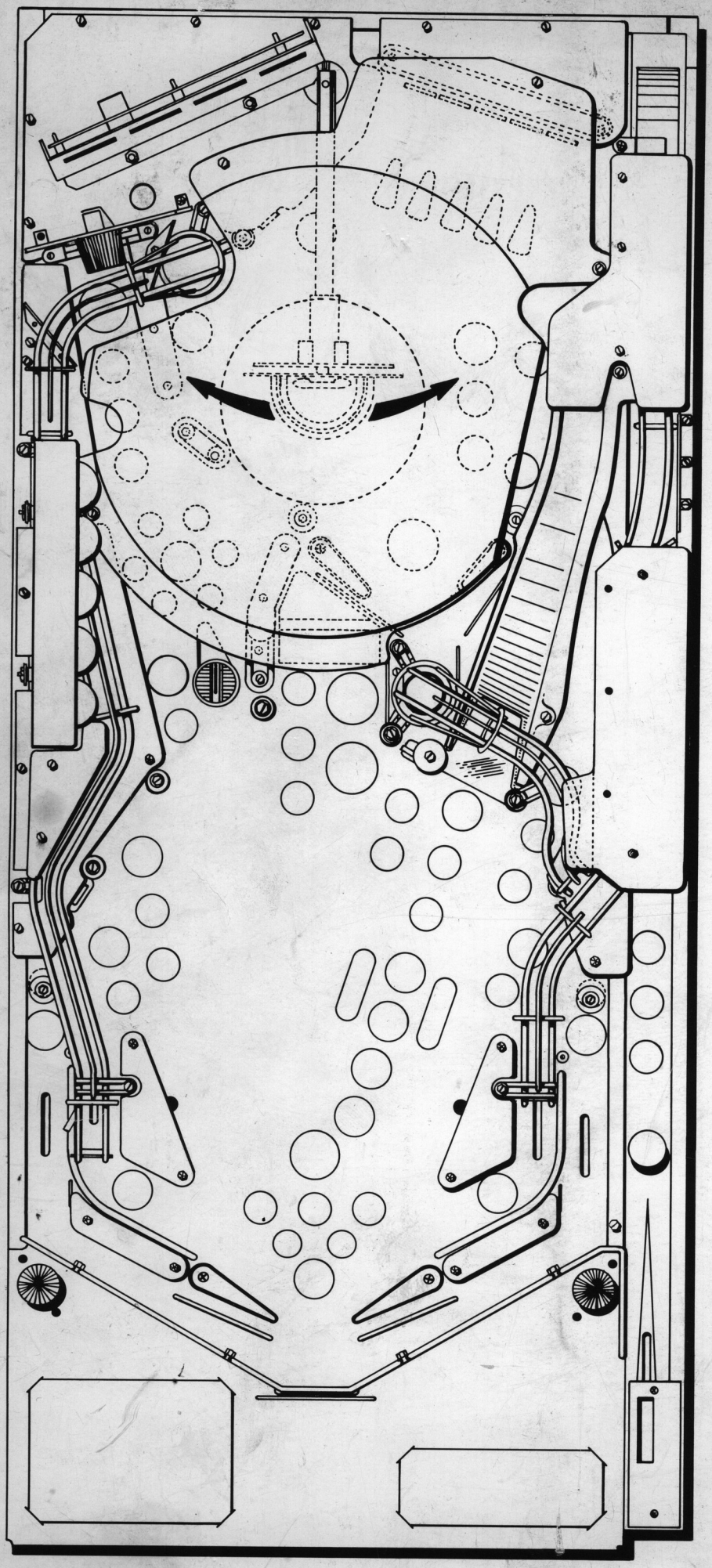

Premier®
Technology

759 INDUSTRIAL DRIVE
BENSENVILLE, IL 60106
1-708-350-0400
FAX: 1-708-350-1097

THE PREMIER HOTLINE
1-800-444-0761

©1994 Premier Technology
Copyright All Rights Reserved
Printed In U.S.A.

SHARK ATTACK

PREMIER TECHNOLOGY
759 INDUSTRIAL DRIVE
BENSENVILLE, IL 60106
1-708-350-0400
TELEX 215009 PRMR
FAX: 1-708-350-1097

INSTRUCTIONS

PREMIER GAMES ARE DESIGNED TO GIVE YOU THE BEST POSSIBLE SERVICE. TO INSURE THIS, ALL REPLACEMENTS SHOULD BE MADE WITH GENUINE GOTTLIEB PARTS, OBTAINABLE ONLY AT PREMIER DISTRIBUTORS.

"THERE IS NO SUBSTITUTE FOR QUALITY."

14390

PREMIER TECHNOLOGY
759 INDUSTRIAL DRIVE
BENSENVILLE, IL 60106
U.S.A.
1-708-350-0400

FAX: 1-708-350-1097

IMPORTANT

WARRANTY DOCUMENTS ENCLOSED

OPEN IMMEDIATELY

SUPPLEMENTAL ADDENDUM

ATTACH TO AND A PART OF
SHAQ ATTAQ (GAME #743)
INSTRUCTION MANUAL

GAME AS SHIPPED VARIES FROM THE INSTRUCTION MANUAL AS PRINTED.

CHANGED PAGE 2

"BEAT THE BUZZER" SHOULD READ "SHOT CLOCK" IN BASKET HOOP DESCRIPTION.

ADDED TO PAGE 7

K. LED DISPLAY TEST
This test checks the operation of the individual digits of the LED Display Board. Pressing the right flipper button will advance to the next step of the test. The digits 0-9 will appear in numerical order starting from the leftmost to rightmost digit position. Only one digit should light during each step of this test.

CHANGED PAGE 15

CHANGED STEP 68 (HIDDEN FEATURES BONUS) FACTORY DEFAULT TO HARD.

ADDED TO PAGE 17

ADD THE FOLLOWING SENTENCE TO THE POST ADJUSTMENTS SECTION.
The playing time in the upper section of the playfield can be controlled by the position of the lower post of the island located just to the left of the spinning disc. The upper position is for conservative playing time and the lower position is for liberal playing time.

CHANGED PAGE 68

MA-1790C SHOULD BE MA-1790A, MA-1791C SHOULD BE MA-1791A

ADDED TO PAGE 65

SEE POST ADJUSTMENT ADDED IN ILLUSTRATION BELOW.

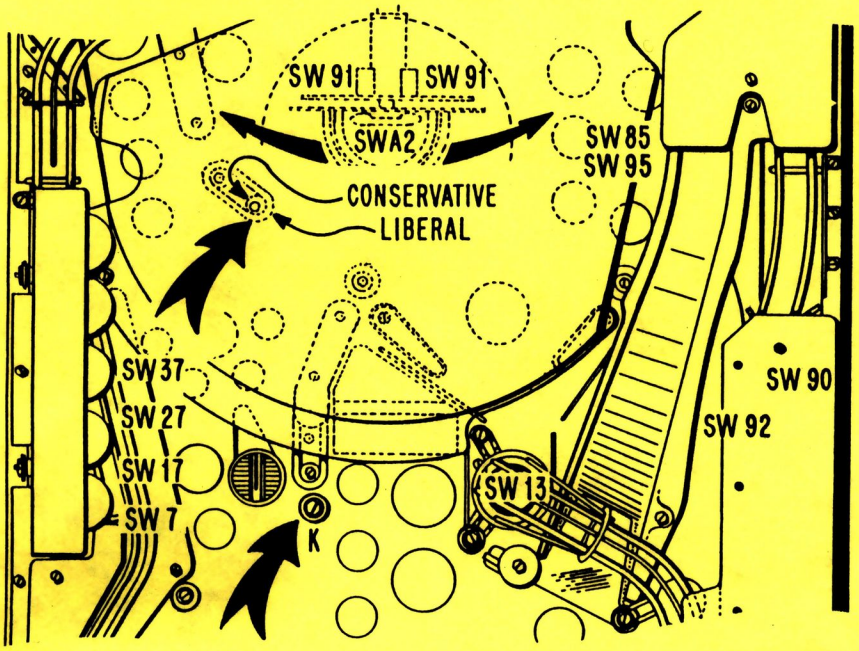

CHANGED PAGE 67

BUMPER TYPE "K" WAS BUMPER TYPE "A", SEE ILLUSTRATION ABOVE.

ATTENTION

BEFORE STARTING GAME:

CAUTION

SECURE THE LIGHTBOX TO THE CABINET WITH THE TWO SETS OF BOLTS AND LOCKWASHERS PROVIDED.

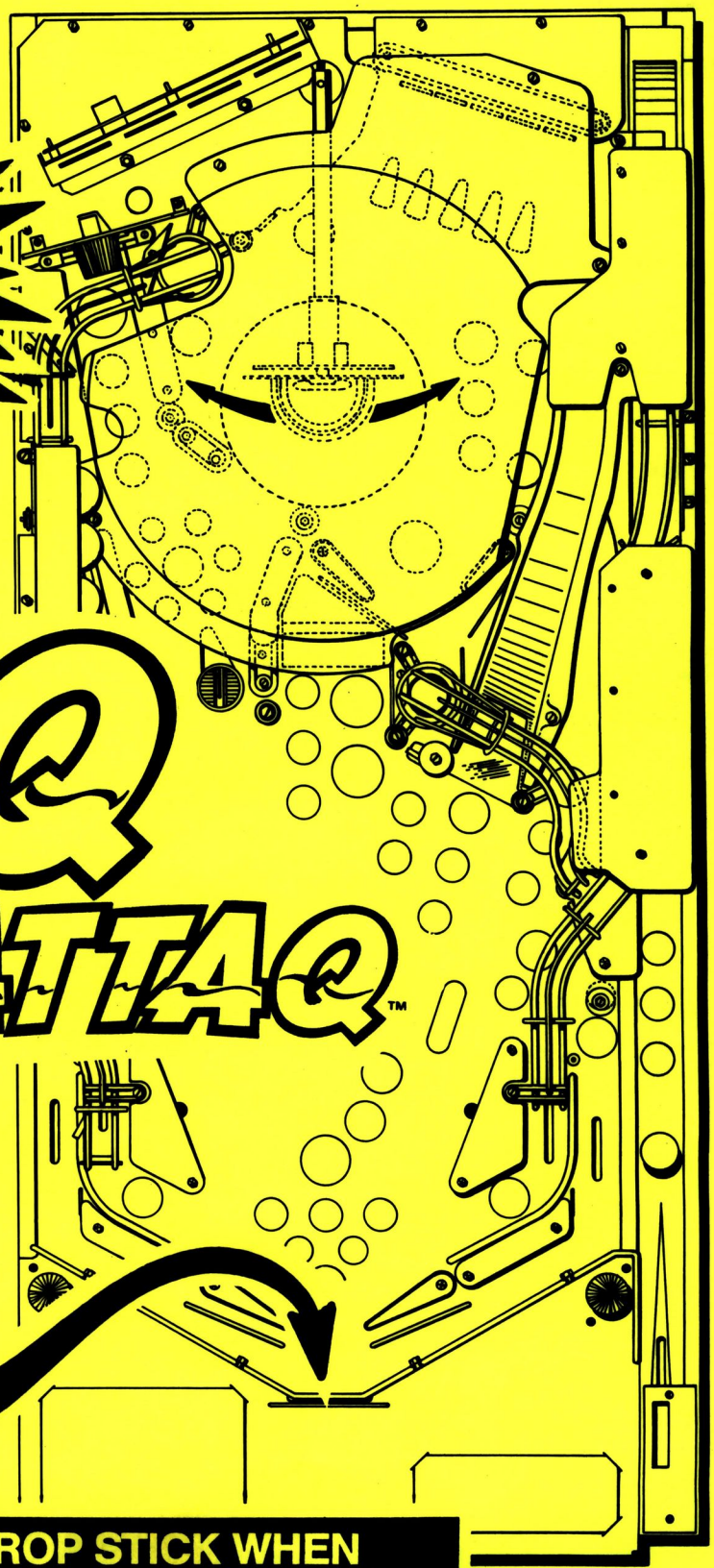

SHAQ ATTAQ™

PLACE 4 BALLS IN BALL RETURN TROUGH VIA OUTHOLE.

⚠ CAUTION **USE PROP STICK WHEN SERVICING UNDER PLAYFIELD**

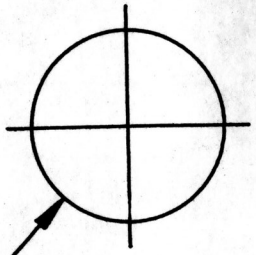

1" DIA. HOLE

TICKET DISPENSER TEMPLATE

1. SEE PARAGRAPH:
   D. TICKET DISPENSER (OPTIONAL) IN YOUR INSTRUCTION MANUAL TO DRILL THRU THE FIVE HOLES IN THE CABINET AND INSTALLATION INSTRUCTIONS.
2. CUT 3/8" OR 1/2" PLYWOOD TO DIMENSIONS INDICATED.
3. CENTER PUNCH THRU TEMPLATE, DRILL FIVE HOLES.
4. PLACE WOOD SPACER ON OUTSIDE OF CABINET AND ATTACH TICKET DISPENSER.

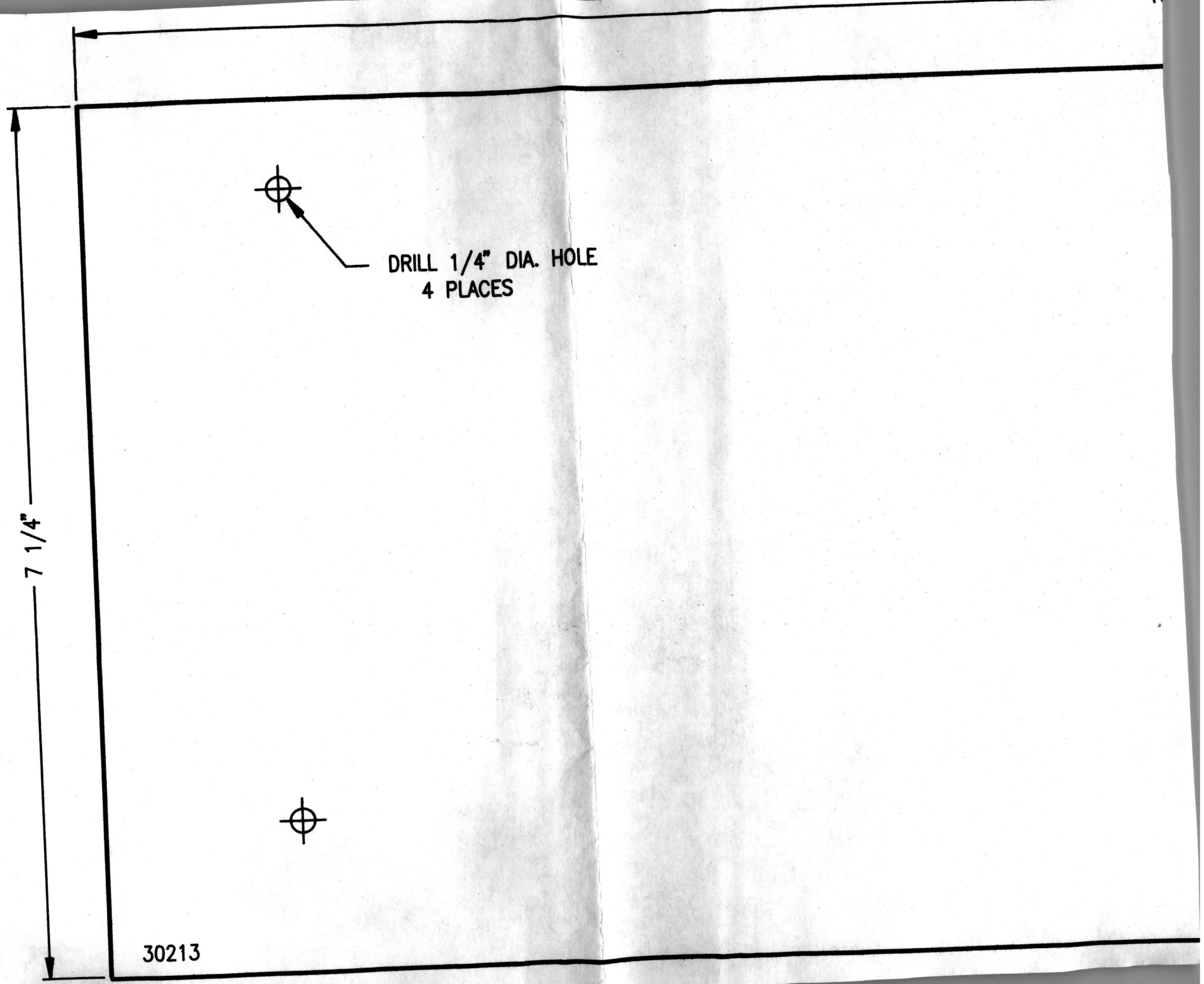
DRILL 1/4" DIA. HOLE
4 PLACES
7 1/4"
30213

Premier®
Technology

759 INDUSTRIAL DRIVE, BENSENVILLE, ILLINOIS 60106-1304, (708) 350-0400, TELEX: 215009 PRMR UR FAX: (708) 350-1097

Dear Customer:

Congratulations! You have selected a GOTTLIEB, the finest quality pinball machine. In fact, because we are convinced GOTTLIEB is a superior product, we have the confidence to provide you with the best protection in the industry, a MANUFACTURER'S PARTS REPLACEMENT LIMITED WARRANTY FOR ONE YEAR ON ALL BASIC AND MACHINE PARTS AND NINETY (90) DAYS ON PRINTED CIRCUIT BOARDS.*

As manufacturers of the GOTTLIEB pinball machine, we at Premier Technology are committed to strive toward consistent customer satisfaction by providing product and service with the highest standards of quality and reliability. We believe our Parts Replacement Limited Warranty reflects that commitment.

We also recognize we must always work toward continuous improvement because it is essential to the industry's future success. Therefore, we will continue to bring innovative product developments to the pinball industry, all with the pride and traditional heritage that is GOTTLIEB pinball.

Please take a moment to fill out the attached, postage-prepaid, warranty card and return it to us.

Thank you for selecting quality built GOTTLIEB - The Premier name in pinball.

Sincerely,

PREMIER TECHNOLOGY

Gilbert G. Pollock
President

GGP:lt

* This letter is not intended to serve as warranty. See the Manufacturer's Parts Replacement Limited Warranty for specific details, terms and conditions.

Gottlieb®

The Premier® Name in Pinball

Game Name: _____ Game Number: _____

Machine Serial Number: _____

Distributor: _____

Sold To: Name: _____

Street Address: _____

City: _____ State: _____ Zip Code: _____

Date of Sale: _____

Salesperson: _____
(Enter last four digits of Social Security Number)

COPY 1: GOTTLIEB DISTRIBUTOR COPY

25800

Gottlieb®

The Premier® Name in Pinball

Game Name: _____ Game Number: _____

Machine Serial Number: _____

Distributor: _____

Sold To: Name: _____

Street Address: _____

City: _____ State: _____ Zip Code: _____

Date of Sale: _____

COPY 2: PURCHASER COPY

25800

PARTS REPLACEMENT LIMITED WARRANTY

DEFINITIONS

1. "Covered Parts" shall mean all the factory installed assemblies, subassemblies and component parts of the Gottlieb Machine, except for the Printed Circuit Boards.

2. "Gottlieb Machine" shall mean the Gottlieb pinball machine more fully described above that was manufactured by Premier Technology and sold to the Purchaser by an authorized Gottlieb distributor.

3. "Limited Warranty" shall mean the Parts Replacement Limited Warranty.

4. "Purchaser" shall mean the initial retail purchaser of the Gottlieb Machine from an authorized Gottlieb distributor.

5. "Printed Circuit Boards" shall mean the fully installed and assembled printed circuit boards of the Gottlieb Machine.

LIMITED WARRANTY COVERAGE

SUBJECT TO THE TERMS, CONDITIONS AND EXCLUSIONS CONTAINED IN THIS LIMITED WARRANTY, PREMIER TECHNOLOGY, AS MANUFACTURER OF THE GOTTLIEB MACHINE, WARRANTS TO THE PURCHASER THAT (A) THE COVERED PARTS INSTALLED BY PREMIER TECHNOLOGY IN THE GOTTLIEB MACHINE AND AS SOLD TO THE PURCHASER WILL BE FREE OF DEFECTS IN MATERIALS AND WORKMANSHIP FOR A PERIOD OF ONE (1) YEAR FROM THE DATE OF PURCHASE; AND (B) THE PRINTED CIRCUIT BOARDS INSTALLED BY PREMIER TECHNOLOGY IN THE GOTTLIEB MACHINE AND SOLD TO THE PURCHASER WILL BE FREE OF DEFECTS IN MATERIALS AND WORKMANSHIP FOR A PERIOD OF NINETY (90) DAYS FROM THE DATE OF PURCHASE. PREMIER TECHNOLOGY'S OBLIGATION UNDER THIS WARRANTY IS LIMITED TO REPAIRING OR REPLACING: (A) ANY DEFECTIVE COVERED PART AT NO COST TO PURCHASER FOR MATERIALS OR LABOR FOR A PERIOD OF ONE (1) YEAR FROM THE DATE OF PURCHASE; AND (B) ANY DEFECTIVE PRINTED CIRCUIT BOARD AT NO COST TO PURCHASER FOR MATERIALS OR LABOR FOR A PERIOD OF NINETY (90) DAYS FROM THE DATE OF PURCHASE.

EXCLUSIONS

NOTWITHSTANDING ANYTHING ELSE CONTAINED IN THIS LIMITED WARRANTY, THE FOLLOWING PARTS ARE NOT INCLUDED UNDER THE COVERAGE OF THIS LIMITED WARRANTY DUE TO ORDINARY WEAR AND TEAR:

1. RUBBER RINGS
2. LIGHT BULBS
3. FUSES
4. LEG LEVELERS
5. SOLENOID/COILS

ALL COSTS OF PACKAGING, TRANSPORTATION, DELIVERY AND/OR SHIPPING OF DEFECTIVE COVERED PARTS AND/OR PRINTED CIRCUIT BOARDS ARE THE SOLE RESPONSIBILITY OF PURCHASER, ARE NOT REIMBURSABLE TO PURCHASER BY PREMIER TECHNOLOGY AND ARE NOT COVERED BY THIS LIMITED WARRANTY.

THIS LIMITED WARRANTY IS ONLY GIVEN BY PREMIER TECHNOLOGY TO THE PURCHASER AND IS NEITHER ASSIGNABLE NOR TRANSFERABLE BY THE PURCHASER TO ANY OTHER PERSON OR ENTITY AT ANY TIME, INCLUDING BUT NOT LIMITED TO, ON ANY RESALE OF THE GOTTLIEB MACHINE BY THE PURCHASER.

THIS LIMITED WARRANTY DOES NOT APPLY TO DAMAGE TO COVERED PARTS AND/OR PRINTED CIRCUIT BOARDS CAUSED (1) IN THE COURSE OF HANDLING OR ASSEMBLY BY ANY PERSON OR ENTITY, INCLUDING BUT NOT LIMITED TO, THE PURCHASER; (2) BY USE OTHER THAN THE PRESCRIBED USE OF THE GOTTLIEB MACHINE, USE IN VIOLATION OF INSTRUCTIONS, OR USE CONTRARY TO REASONABLE PRACTICE; OR (3) DURING ANY SHIPMENT AND/OR DELIVERY OF THE GOTTLIEB MACHINE.

IN THE EVENT OF ANY TAMPERING OR REMOVAL OF ANY OF PREMIER TECHNOLOGY'S MARKINGS ON ANY COVERED PART OR PRINTED CIRCUIT BOARDS ON ANY GOTTLIEB MACHINE BY ANY PERSON OR ENTITY, THIS LIMITED WARRANTY SHALL BE IMMEDIATELY NULL AND VOID.

THIS LIMITED WARRANTY IS EXPRESSLY IN LIEU OF ANY AND ALL OTHER WARRANTIES, LIMITATIONS, OBLIGATIONS OR LIABILITIES, EXPRESS OR IMPLIED, INCLUDING, BUT NOT LIMITED TO, ANY IMPLIED WARRANTY OF MERCHANTABILITY OR FITNESS FOR A PARTICULAR PURPOSE. ALL OF SUCH OTHER WARRANTIES, LIMITATIONS, OBLIGATIONS OR LIABILITIES ARE HEREBY EXPRESSLY DISCLAIMED BY PREMIER TECHNOLOGY. IN NO EVENT SHALL PREMIER TECHNOLOGY BE LIABLE TO ANY PERSON OR ENTITY FOR ANY LOSS OF TIME, DIRECT OR INDIRECT DAMAGES, LOST OR ANTICIPATED PROFITS, LOST SAVINGS OR SPECIAL, INCIDENTAL, EXEMPLARY, OR CONSEQUENTIAL DAMAGES, FOR ANY REASON WHATSOEVER, INCLUDING, BUT NOT LIMITED TO, ARISING OUT OF OR IN CONNECTION WITH THE SALE OR USE OF THE GOTTLIEB MACHINE, BREACH OF ANY CONTRACT, TORT CLAIMS INCURRED BY OR AGAINST PURCHASER AT ANY TIME OR THE FAILURE OF ANY GOTTLIEB MACHINE TO SATISFY THE REQUIREMENTS OF PURCHASER. PREMIER TECHNOLOGY SHALL NOT BE LIABLE FOR ANY CLAIM, DEMAND OR ACTION AGAINST PURCHASER BY ANY THIRD PARTY.

ADDITIONAL TERMS AND CONDITIONS

In order for this Limited Warranty to apply and to be effective, the following procedures must be complied with:

1. The warranty registration card delivered with the Gottlieb Machine must be completed in full and returned to Premier Technology at the address set forth in the warranty registration card within ten (10) days after the date of retail purchase of the Gottlieb Machine by Purchaser.

2. All defective Covered Parts or Printed Circuit Boards must be returned (a) to a Gottlieb distributor authorized by Premier Technology to receive such shipment and (b) in accordance with such distributor's specific warranty procedures.

3. Covered Parts or Printed Circuit Boards must not be tampered with or modified in any manner and must be returned to Premier Technology as originally manufactured and installed by Premier Technology.

FAILURE TO FOLLOW ALL THE TERMS AND CONDITIONS OF THIS LIMITED WARRANTY SHALL IMMEDIATELY VOID THIS LIMITED WARRANTY AND PREMIER TECHNOLOGY SHALL HAVE NO FURTHER OBLIGATION TO PURCHASER PURSUANT TO THIS LIMITED WARRANTY.

BFC FORMS SERVICE
(708) 495-3990

Gottlieb®

The Premier® Name in Pinball

Game Name: _____ Game Number: _____

Machine Serial Number: _____

Distributor: _____

Sold To: Name: _____

Street Address: _____

City: _____ State: _____ Zip Code: _____

Date of Sale: _____

Salesperson: _____
(Enter last four digits of Social Security Number)

COPY 3: RETURN TO PREMIER TECHNOLOGY — USE SELF-ADDRESSED MAILER.

FOLD HERE

NO POSTAGE
NECESSARY
IF MAILED
IN THE
UNITED STATES

BUSINESS REPLY MAIL

FIRST CLASS MAIL PERMIT NO. 88 BENSENVILLE, ILLINOIS 60106

POSTAGE WILL BE PAID BY ADDRESSEE

Premier®
Technology

759 Industrial Drive
Bensenville, IL 60106

FOLD HERE

1 PLAY = .50 CENTS

3 BALLS PER PLAY